Node-Disjoint Paths and Related Problems on Hierarchical Cubic Networks

Jung-Sheng Fu
Takming College, Taipei, TAIWAN

Gen-Huey Chen
Department of Computer Science and Information Engineering,
National Taiwan University,

and

Dyi-Rong Duh
Department of Computer Science and Information Engineering,
National Chi Nan University, Nantou, TAIWAN

Abstract

An n-dimensional hierarchical cubic network (denoted by HCN(n)) contains 2^n n-dimensional hypercubes. The diameter of the HCN(n), which is equal to $n+\lfloor(n+1)/3\rfloor+1$, is about two-thirds the diameter of a comparable hypercube, although it uses about half as many links per node. In this paper, a maximal number of node-disjoint paths are constructed between every two distinct nodes of the HCN(n). Their maximal length is bounded above by $n+\lfloor n/3\rfloor+4$, which is nearly optimal. The (n+1)-wide diameter and n-fault diameter of the HCN(n) are shown to be $n+\lfloor n/3\rfloor+3$ or $n+\lfloor n/3\rfloor+4$, which are about two-thirds those of a comparable hypercube. Our results reveal that the HCN(n) has a smaller wide diameter and fault diameter than a comparable hypercube.

Index Terms: Container, fault diameter, hierarchical cubic network, node-disjoint paths, wide diameter

Correspondence Address: Professor Gen-Huey Chen
Department of Computer Science and Information Engineering,
National Taiwan University,
Taipei, TAIWAN 10764
e-mail: ghchen@csie.ntu.edu.tw
Tel: (886)-(2)-23625336 Ext. 427
Fax: (886)-(2)-23628167

1 Introduction

The hierarchical cubic network (HCN for short), which was proposed in [9] as an alternative to the hypercube, consists of 2^n basic components named *clusters*. Each cluster is an n-dimensional hypercube (n-cube for short). If each cluster is viewed as a single node, then the HCN appears as a 2^n-node complete graph. The HCN can emulate a hypercube of the same size in constant time, but with only about half as many links per node. The average internode distances in the HCN under random and localized traffic patterns are the same as a comparable hypercube. When message generation rates are moderate, the average message transit delays in the HCN are slightly better than a comparable hypercube. This is a consequence of the fact that the HCN has a smaller maximal routing distance than a comparable hypercube.

Previous works related to the HCN can be found in the literature [3], [9], [18], [19]. A shortest-path routing algorithm was presented in [3], [18], [19]. A broadcasting algorithm appeared in [3]. Some parallel algorithms were designed in [9]. The diameter, which is about two-thirds the diameter of a comparable hypercube, was computed in [18], [19]. A Hamiltonian cycle was constructed in [3], [18].

Suppose that A and B are two distinct nodes of an interconnection network (network for short) W. An (A, B)-*container* in W is a set of disjoint paths between A and B. Throughout this paper, "disjoint paths" always means "internally node-disjoint paths". The *width* of a container is the number of paths it contains. The *length* of a container is the maximal length of paths it contains. A container is the *best* if its length is minimum.

The length of a best (A, B)-container is the *x-wide distance* between A and B, where x is the width of the container. The maximal x-wide distance in W is the *x-wide diameter* of W. The maximal diameter in W with at most y nodes removed is the *y-fault diameter* of W. When x=1 (y=0), the x-wide diameter (y-fault diameter) is identical with the diameter. Apparently, the x-wide diameter is the maximal length of best containers of width x, and the y-fault diameter is bounded above by the (y+1)-wide diameter.

The concepts of container, wide diameter, and fault diameter arose naturally from the study of routing (such as Rabin's Information Dispersal Algorithm (IDA) [15]), reliability, fault tolerance, and communication protocols (such as Byzantine algorithms) in parallel architectures and distributed computer networks (see [10]). Containers can be used to accelerate the transmission rate and to enhance the transmission reliability. In [15], the IDA was proposed on the hypercube which involved the construction

of disjoint paths. The IDA has numerous potential applications to secure and fault-tolerant storage and transmission of information.

On the other hand, the wide diameter and fault diameter are two generalizations of the diameter. For all pairs of nodes, the diameter measures the maximal length of shortest paths, while the wide diameter measures the maximal length of best containers. In practical networks, node faults may happen. The fault diameter, which was first introduced in [12], estimates the maximal increment of the diameter when there are node faults. It is both practically and theoretically important to compute the wide diameter and fault diameter. Previous works related to container, wide diameter, and fault diameter can be found in the literature [2]-[8], [10]-[12], [14], [16], [17].

According to Menger's theorem [1], there are k_w disjoint paths between any two nodes of W, where k_w denotes the connectivity of W. The x-wide diameter and y-fault diameter in W are infinity whenever $x>k_w$ and $y>k_w-1$, respectively. For theoretical interest, most of previous works computed for W containers of width k_w (e.g., [2], [3], [5]-[8], [11], [17]), k_w-wide diameters (e.g., [7], [8], [11]), and (k_w-1)-fault diameters (e.g., [3], [4], [7], [8], [11], [12], [16]).

We use HCN(n) to represent the HCN that contains 2^n n-cubes. The connectivity and diameter of the HCN(n) are $n+1$ (see [3]) and $n+\lfloor (n+1)/3 \rfloor+1$ (see [19]), respectively. In [3], containers of width $n+1$ were proposed in the HCN(n) whose lengths are $2n+6$ at most. In this paper, we improve on the work of [3] by constructing new containers of width $n+1$ in the HCN(n) whose lengths are $n+\lfloor n/3 \rfloor+4$ at most. The construction of new containers makes use of shortest paths of the HCN(n) and best containers of the hypercube. In addition, the (n+1)-wide diameter and n-fault diameter of the HCN(n) are shown to be $n+\lfloor n/3 \rfloor+3$ or $n+\lfloor n/3 \rfloor+4$.

In the next section, we formally define the HCN(n) in graph-theoretic terms. The shortest-path routing algorithm of the HCN(n) and best containers of the hypercube are reviewed. New containers are proposed in Section 3, and their lengths are analyzed in Section 4. In Section 5, a lower bound on the n-fault diameter is suggested and the main result of this paper is summarized. Finally, this paper concludes with some remarks in Section 6.

2 Preliminaries

The following is a formal definition of the HCN(n) in graph-theoretic terms.

Definition 1. The node set of the HCN(n) is $\{(X, Y) \mid X$ and Y are binary sequences of length $n\}$. Each node (X, Y) is adjacent to (1) $(X, Y^{(k)})$ for all $1 \le k \le n$, where $Y^{(k)}$ differs from Y at the kth bit position, (2) (Y, X) if $X \ne Y$, and (3) $(\overline{X}, \overline{Y})$ if $X=Y$, where $\overline{X}$ and $\overline{Y}$ are the bitwise complements of X and Y, respectively.

The cluster where a node (X, Y) resides is denoted by X, and its location in the cluster is denoted by Y. Links (1) are inside clusters, whereas links (2) and (3) connect two clusters. Links (2) and (3) are referred to as *nondiameter links* and *diameter links*, respectively. The HCN(n) is regular of degree n+1. Since the HCN(1) and the HCN(2) are easy, we assume $n \ge 3$ throughout this paper. Refer to Figure 1 for the HCN(3).

Suppose that $I=(X, Y)$ and $I'=(X', Y')$ are two distinct nodes of the HCN(n), where $X \ne X'$. It was shown in [19] that any shortest path from I to I' contains (1) one nondiameter link (without diameter links) or (2) two nondiameter links (without diameter links) or (3) one diameter link. The shortest path for (1), denoted by P_1^*, can be expressed as follows.

P_1^*: $(X, Y) \Rightarrow^* (X, X') \rightarrow (X', X) \Rightarrow^* (X', Y')$,

where $\rightarrow$ denotes a link and $\Rightarrow^*$ denotes a shortest path (inside a cluster). The length of P_1^*, denoted by $|P_1^*|$, is equal to $d_H(Y, X')+d_H(X, Y')+1$, where $d_H()$ is the Hamming distance function.

Let P_2 and P_3 denote the paths for (2) and (3), respectively, which can be expressed as follows.

P_2: $(X, Y) \Rightarrow^* (X, Z) \rightarrow (Z, X) \Rightarrow^* (Z, X') \rightarrow (X', Z) \Rightarrow^* (X', Y')$;

P_3: $(X, Y) \Rightarrow^* (X, T) \rightarrow (T, X) \Rightarrow^* (T, T) \rightarrow (\overline{T}, \overline{T}) \Rightarrow^* (\overline{T}, X') \rightarrow (X', \overline{T}) \Rightarrow^* (X', Y')$,

where $Z \notin \{X, X'\}$, $(X, T) \rightarrow (T, X) \Rightarrow^* (T, T)$ degenerates to (X, X) if $T=X$, and $(\overline{T}, \overline{T}) \Rightarrow^* (\overline{T}, X') \rightarrow (X', \overline{T})$ degenerates to (X', X') if $T=\overline{X'}$.

If Z belongs to a shortest path from Y to Y' in the n-cube, then P_2 is a shortest path for (2), denoted by P_2^*. Clearly, $|P_2^*|=d_H(Y, Y')+d_H(X, X')+2$. On the other hand, P_3 is a shortest path for (3), denoted by P_3^*, if $T=T^*$ can minimize $|P_3|$. T^* can be determined as described below.

We have $|P_3|=d_H(Y, T)+d_H(X, T)+d_H(\overline{T}, X')+d_H(\overline{T}, Y')+\delta$, where $\delta=1$ if $T=X=\overline{X'}$, $\delta=2$ if $T \in \{X, \overline{X'}\}$ and $X \ne \overline{X'}$, and $\delta=3$ else. Define $Q_{\min}=\{T \mid d_H(Y, T)+d_H(X, T)+d_H(\overline{T}, X')+d_H(\overline{T}, Y')$ is minimum$\}$. Let $X=x_1x_2\ldots x_n$, $Y=y_1y_2\ldots y_n$, $X'=x'_1x'_2\ldots x'_n$, $Y'=y'_1y'_2\ldots y'_n$, and $T=t_1t_2\ldots t_n$. Then $d_H(Y, T)+d_H(X, T)+d_H(\overline{T}, X')+d_H(\overline{T}, Y')=\sum_{i=1}^{n}\{(y_i \oplus t_i)+(x_i \oplus t_i)+(\overline{t_i} \oplus x'_i)+(\overline{t_i} \oplus y'_i)\}$, where $\oplus$ performs an exclusive-OR

operation. We have $T \in Q_{\min}$ if and only if $(y_i \oplus t_i)+(x_i \oplus t_i)+(\overline{t_i} \oplus x'_i)+(\overline{t_i} \oplus y'_i)$ is minimum for all $1 \le i \le n$. According to [19], $T^*=X$ if $X \in Q_{\min}$, $T^*=\overline{X'}$ if $X \notin Q_{\min}$ and $\overline{X'} \in Q_{\min}$, and T^* can be any element of $Q_{\min}$ else. We have $|P_3^*|=d_H(Y, T^*)+d_H(X, T^*)+d_H(\overline{T^*}, X')+d_H(\overline{T^*}, Y')+\delta$. A shortest path from I to I' can be determined as the shortest one of P_1^*, P_2^*, and P_3^*.

In [19], bit patterns of X, Y, X', and Y' were examined in order to compute the diameter of the HCN(n). We use $F_1, F_2, \ldots, F_8$ to denote the sets of dimensions having the same bit patterns, where

$F_1=\{i \mid (x_i, y_i, x'_i, y'_i)=(0, 0, 0, 0) \text{ or } (1, 1, 1, 1)\}$; $F_2=\{i \mid (x_i, y_i, x'_i, y'_i)=(0, 1, 1, 0) \text{ or } (1, 0, 0, 1)\}$;
$F_3=\{i \mid (x_i, y_i, x'_i, y'_i)=(0, 1, 0, 1) \text{ or } (1, 0, 1, 0)\}$; $F_4=\{i \mid (x_i, y_i, x'_i, y'_i)=(0, 0, 1, 1) \text{ or } (1, 1, 0, 0)\}$;
$F_5=\{i \mid (x_i, y_i, x'_i, y'_i)=(0, 1, 0, 0) \text{ or } (1, 0, 1, 1)\}$; $F_6=\{i \mid (x_i, y_i, x'_i, y'_i)=(0, 0, 0, 1) \text{ or } (1, 1, 1, 0)\}$;
$F_7=\{i \mid (x_i, y_i, x'_i, y'_i)=(0, 0, 1, 0) \text{ or } (1, 1, 0, 1)\}$; $F_8=\{i \mid (x_i, y_i, x'_i, y'_i)=(0, 1, 1, 1) \text{ or } (1, 0, 0, 0)\}$.

Define $f_k=|F_k|$, where $1 \le k \le 8$. Clearly, $f_1+f_2+ \ldots +f_8=n$. F_k and f_k will be used to simplify the discussion in Sections 3, 4, and 5. The following lemma expresses $d_H(Y, X')$, $d_H(X, Y')$, $d_H(Y, Y')$, $d_H(X, X')$, $d_H(X, Y)$, $d_H(X', Y')$, $d_H(\overline{X}, Y')$, $d_H(\overline{Y}, X')$, and $d_H(Y, T)+d_H(X, T)+d_H(\overline{T}, X')+d_H(\overline{T}, Y')$, in terms of f_k. They will be used very often in the rest of this paper.

Lemma 1. $d_H(Y, X')=f_3+f_4+f_5+f_7$, $d_H(X, Y')=f_3+f_4+f_6+f_8$, $d_H(Y, Y')=f_2+f_4+f_5+f_6$, $d_H(X, X')=f_2+f_4+f_7+f_8$, $d_H(X, Y)=f_2+f_3+f_5+f_8$, $d_H(X', Y')=f_2+f_3+f_6+f_7$, $d_H(\overline{X}, Y')=f_1+f_2+f_5+f_7$, $d_H(\overline{Y}, X')=f_1+f_2+f_6+f_8$, and $d_H(Y, T)+d_H(X, T)+d_H(\overline{T}, X')+d_H(\overline{T}, Y')=2f_1+2f_2+2f_3+f_5+f_6+f_7+f_8$, where $T \in Q_{\min}$.

Proof. We have $d_H(Y, X')=\sum_{i=1}^{n}(y_i \oplus x'_i)=|F_3|+|F_4|+|F_5|+|F_7|=f_3+f_4+f_5+f_7$. The computations for $d_H(X, Y')$, $d_H(Y, Y')$, $d_H(X, X')$, $d_H(X, Y)$, $d_H(X', Y')$, $d_H(\overline{X}, Y')$, and $d_H(\overline{Y}, X')$ are all similar. On the other hand, we have $(y_i \oplus t_i)+(x_i \oplus t_i)+(\overline{t_i} \oplus x'_i)+(\overline{t_i} \oplus y'_i)=2$ if $i \in F_1 \cup F_2 \cup F_3$, 0 if $i \in F_4$, and 1 if $i \in F_5 \cup F_6 \cup F_7 \cup F_8$. Hence $d_H(Y, T)+d_H(X, T)+d_H(\overline{T}, X')+d_H(\overline{T}, Y')=\sum_{i=1}^{n}\{(y_i \oplus t_i)+(x_i \oplus t_i)+(\overline{t_i} \oplus x'_i)+(\overline{t_i} \oplus y'_i)\}=2f_1+2f_2+2f_3+f_5+f_6+f_7+f_8$. □

Next, the best container of the hypercube is reviewed. Suppose that $A=a_1a_2\ldots a_n$ and $B=b_1b_2\ldots b_n$ are two distinct nodes of an n-cube. A best (A, B)-container of width n was proposed by Saad and Schultz [17]. Let $C=A \oplus B$. There are $d_H(A, B)$ 1 bits contained in C. Assume $c=d_H(A, B)$, and let u_i and v_j be the positions of the ith 1 bit and jth 0 bit, respectively, from the left in C, where $1 \le i \le c$, $1 \le j \le n-c$, $1 \le u_i \le n$, and $1 \le v_j \le n$. For example, if A=00001 and B=10011, then C=10010, $(u_1, u_2)=(1, 4)$, and $(v_1, v_2, v_3)=(2, 3, 5)$.

Saad and Schultz′s best (A, B)-container is shown in Figure 2, where both end nodes of a link labeled with u_i (v_j) differ at the u_ith (v_jth) bit position. The upper c paths each of length c are obtained by cyclically shifting the vector $(u_1, u_2, \ldots, u_c)$ left c–1 times. The other n–c paths each of length c+2 are obtained by prefixing and suffixing v_j to the vector $(u_1, u_2, \ldots, u_c)$. Saad and Schultz′s best (A, B)-container has length $d_H(A, B)$ if $d_H(A, B)=n$, and $d_H(A, B)+2$ if $d_H(A, B)<n$.

In the following, two properties of Saad and Schultz′s containers are presented which will be used to show the disjoint property of the containers proposed in Section 3.

Lemma 2. Suppose that A, B, and H are three distinct nodes of an n-cube. There is a shortest path from A to H that has non-A common nodes with only one path, denoted by P, of Saad and Schultz′s best (A, B)-container (the shortest path should not pass through B). Furthermore, $|P|=3$ if $d_H(A, B)=1$.

Proof. Without loss of generality, suppose that A and H differ at the leftmost h bit positions, where $h=d_H(A, H)$. Let $D=a_1a_2...a_h \oplus b_1b_2...b_h$ contain d 1 bits, where $A=a_1a_2...a_n$ and $B=b_1b_2...b_n$. The shortest path from A to H that corresponds to $(v_1, v_2, \ldots, v_{h-d}, u_1, u_2, \ldots, u_d)$ meets our requirement, where u_i and v_j have the same meanings as above. If $d_H(A, B)=1$, then $d=0$ or 1. Since $H \neq B$, we have $h>d$. Thus, a shortest path from A to H corresponds to $(v_1, v_2, \ldots, v_h)$ if $d=0$ or $(v_1, v_2, \ldots, v_{h-1}, u_1)$ if $d=1$. Both these paths intersect the container path corresponding to (v_1, u_1, v_1), i.e., $|P|=3$. □

Lemma 3. Suppose that A and B are two distinct nodes of an n-cube and $d_H(A, B)=c$. The c shortest paths of Saad and Schultz′s best (A, B)-container are disjoint with the n–c shortest paths of Saad and Schultz′s best $(A, \overline{B})$-container.

Proof. Suppose $C=A \oplus B$. The c shortest paths of Saad and Schultz′s best (A, B)-container can be obtained by cyclically shifting the vector $(u_1, u_2, \ldots, u_c)$ left c–1 times, where u_i and v_j have the same meanings as above. The n–c shortest paths of Saad and Schultz′s best $(A, \overline{B})$-container can be obtained by cyclically shifting the vector $(v_1, v_2, \ldots, v_{n-c})$ left n–c–1 times. Hence they are disjoint. □

3 Containers of width *n*+1

Suppose that $I=(X, Y)$ and $I'=(X', Y')$ are two distinct nodes of the HCN(n). It is not easy to construct a best (I, I')-container because of diameter links and nondiameter links. In [3], an (I, I')-container was proposed whose length is not greater than n+5 if $X=X'$, and $2n$+6 if $X \neq X'$. In this section, we improve on the work of [3] by constructing an (I, I')-container for $X \neq X'$ whose length is $n+\lfloor n/3 \rfloor+4$ at most. The construction of

the (I, I')-container makes use of P_1^*, P_2^*, P_3^*, and Saad and Schultz's best containers. Throughout this section, we assume that $X \neq X'$ and each (I, I')-container has width $n+1$.

The construction of a best (I, I')-container is closely related to the construction of the shortest path from I to I'. As described in Section 2, three shortest paths, i.e., P_1^*, P_2^*, and P_3^*, obeying some constraints need to be generated, in order to obtain the shortest path from I to I'. It appears impossible to construct a best (I, I')-container by a single construction method. The (I, I')-container to be proposed is obtained using a main construction method accompanied by six auxiliary construction methods. Actually, these construction methods correspond to P_1^*, P_2^*, and P_3^*. The worst-case length of the (I, I')-container is nearly optimal.

We use (A), (B), (C), (D), (E), and (F) to denote the six auxiliary construction methods. They are applicable under some conditions. In fact, the main construction method corresponds to P_2^*. (A) and (B) correspond to P_1^* and P_3^*, respectively. On the other hand, (C) is the combination of (A) and (B), (D) is the combination of the main construction method and (A), and (E) is the combination of the main construction method and (B). (F) deals with a special situation for n=3.

3.1 Main construction method

Suppose that $Y \neq Y'$ and $Q_1, Q_2, \ldots, Q_n$ are the n paths of Saad and Schultz's best (Y, Y')-container. Without loss of generality, we assume $|Q_1| \geq |Q_2| \geq \ldots \geq |Q_n|$. If there exists $W_i \in Q_i - \{X, X', Y, Y'\}$, then let R_i be the path P_2 with $Z=W_i$. Refer to Figure 3. The construction of R_i is in accordance with Q_i. That is, the combination of $(X, Y) \Rightarrow^* (X, W_i)$ and $(X', W_i) \Rightarrow^* (X', Y')$ is the same as Q_i, disregarding X and X'. We have $|R_i| = d_H(X, X') + d_H(Y, Y') + 2$ if $i > n - d_H(Y, Y')$, and $|R_i| = d_H(X, X') + d_H(Y, Y') + 4$ if $i \leq n - d_H(Y, Y')$. R_i and R_j are disjoint if $i \neq j$. There are at least $n-2$ paths Q_i such that $Q_i - \{X, X', Y, Y'\} \neq \phi$. They are assumed to be $Q_1, Q_2, \ldots, Q_{n-2}$. From each of these paths we choose a $W_i \in Q_i - \{X, X', Y, Y'\}$. Further, we assume $Q_{n-1} - \{X, X', Y, Y'\} \neq \phi$ if $Q_{n-1} - \{X, X', Y, Y'\} \neq \phi$ or $Q_n - \{X, X', Y, Y'\} \neq \phi$. So, when $Q_n - \{X, X', Y, Y'\} \neq \phi$, $R_1, R_2, \ldots, R_n$ can be obtained.

On the other hand, if $Y=Y'$, then let S_i be the path $(X, Y) \rightarrow (X, Y^{(i)}) \rightarrow (Y^{(i)}, X) \Rightarrow^* (Y^{(i)}, X') \rightarrow (X', Y^{(i)}) \rightarrow (X', Y')$, where $Y^{(i)} \notin \{X, X'\}$. We have $|S_i| = d_H(X, X') + 4$. S_i and S_j are disjoint if $i \neq j$. There are at least $n-2$ nodes $Y^{(i)} \notin \{X, X'\}$ in an n-cube, and they are assumed to be $Y^{(1)}, Y^{(2)}, \ldots, Y^{(n-2)}$. If $Y^{(n-1)} \notin \{X, X'\}$ or $Y^{(n)} \notin \{X, X'\}$, we assume $Y^{(n-1)} \notin \{X, X'\}$. So, when $Y^{(n)} \notin \{X, X'\}$, $S_1, S_2, \ldots, S_n$ can be obtained.

We use P_1^{M}, P_2^{M}, …, P_{n+1}^{M} to represent the n+1 disjoint paths that are obtained by the main construction method. They can be constructed as follows. If $Y \neq Y'$, then let $P_i^{\mathrm{M}} = R_i$ for all $1 \leq i \leq n-2$. If $Y = Y'$, then let $P_i^{\mathrm{M}} = S_i$ for all $1 \leq i \leq n-2$. The construction of P_{n-1}^{M}, P_n^{M}, and P_{n+1}^{M} depends on whether $X \neq Y$ and $X' \neq Y'$ or not, as discussed below.

Case 1. $X \neq Y$ and $X' \neq Y'$. The construction further depends on whether $X' \neq Y$, $X \neq Y'$, and $Y \neq Y'$ or not.

Case 1.1. $X' \neq Y$, $X \neq Y'$, and $Y \neq Y'$. If $\{Q_{n-1}, Q_n\} = \{Y \to X \to Y', Y \to X' \to Y'\}$, then let $P_{n-1}^{\mathrm{M}} = (X, Y) \to (X, X') \to (X', X) \to (X', Y')$, $P_n^{\mathrm{M}} = (X, Y) \to (X, X) \to (X, Y') \to (Y', X) \Rightarrow^* (Y', X') \to (X', Y')$, and $P_{n+1}^{\mathrm{M}} = (X, Y) \to (Y, X) \Rightarrow^* (Y, X') \to (X', Y) \to (X', X') \to (X', Y')$. If $\{Q_{n-1}, Q_n\} \neq \{Y \to X \to Y', Y \to X' \to Y'\}$, then let $P_n^{\mathrm{M}} = (X, Y) \to (Y, X) \Rightarrow^* (Y, X') \to (X', Y) \Rightarrow^* (X', Y')$ and $P_{n+1}^{\mathrm{M}} = (X, Y) \Rightarrow^* (X, Y') \to (Y', X) \Rightarrow^* (Y', X') \to (X', Y')$, where $(X', Y) \Rightarrow^* (X', Y')$ and $(X, Y) \Rightarrow^* (X, Y')$ are the same as Q_n. P_{n-1}^{M} can be determined as follows.

If R_{n-1} exists, then let $P_{n-1}^{\mathrm{M}} = R_{n-1}$. If R_{n-1} does not exist, then $d_{\mathrm{H}}(Y, Y')=1$, $|Q_{n-1}|=3$, and either $Q_{n-1} = Y \to X \to X' \to Y'$ or $Q_{n-1} = Y \to X' \to X \to Y'$. P_{n-1}^{M} can be obtained in accordance with Q_{n-1} by letting $P_{n-1}^{\mathrm{M}} = (X, Y) \to (X, X) \to (X, X') \to (X', X) \to (X', X') \to (X', Y')$ if $Q_{n-1} = Y \to X \to X' \to Y'$, and $(X, Y) \to (X, X') \to (X', X) \to (X', Y')$ if $Q_{n-1} = Y \to X' \to X \to Y'$.

We have $|P_{n-1}^{\mathrm{M}}| \leq d_{\mathrm{H}}(X, X') + d_{\mathrm{H}}(Y, Y') + 2$ if $d_{\mathrm{H}}(Y, Y') > 1$, and $|P_{n-1}^{\mathrm{M}}| \leq d_{\mathrm{H}}(X, X') + d_{\mathrm{H}}(Y, Y') + 4$ if $d_{\mathrm{H}}(Y, Y') = 1$. Both $|P_n^{\mathrm{M}}|$ and $|P_{n+1}^{\mathrm{M}}|$ are at most $d_{\mathrm{H}}(X, X') + d_{\mathrm{H}}(Y, Y') + 2$.

Case 1.2. $X' \neq Y$, $X \neq Y'$, and $Y = Y'$. We let $P_{n+1}^{\mathrm{M}} = (X, Y) \to (Y, X) \Rightarrow^* (Y, X') \to (X', Y)$ $(=(X', Y'))$. The construction of P_n^{M} and P_{n-1}^{M} depends on whether $\{Y^{(n-1)}, Y^{(n)}\} \cap \{X, X'\}$ is empty or not. Recall that if there is one more adjacent node of Y that does not belong to $\{X, X'\}$, it is $Y^{(n-1)}$. If $\{Y^{(n-1)}, Y^{(n)}\} \cap \{X, X'\}$ is empty, then let $P_{n-1}^{\mathrm{M}} = S_{n-1}$ and $P_n^{\mathrm{M}} = S_n$. If $Y^{(n-1)} \notin \{X, X'\}$ and $Y^{(n)} = X$, then let $P_{n-1}^{\mathrm{M}} = S_{n-1}$ and $P_n^{\mathrm{M}} = (X, Y) \to (X, X) \Rightarrow^* (X, X') \to (X', X) \to (X', Y')$, where $(X, X) \Rightarrow^* (X, X')$ does not contain $(X, Y^{(1)})$, $(X, Y^{(2)})$, …, $(X, Y^{(n-1)})$. If $Y^{(n-1)} \notin \{X, X'\}$ and $Y^{(n)} = X'$, then let $P_{n-1}^{\mathrm{M}} = S_{n-1}$ and $P_n^{\mathrm{M}} = (X, Y) \to (X, X') \to (X', X) \Rightarrow^* (X', X') \to (X', Y')$.

If $Y^{(n-1)}=X$ and $Y^{(n)}=X'$, then $d_{\mathrm{H}}(X, X')=2$ and there exists $Z\neq Y$ so that $d_{\mathrm{H}}(X, Z)=1$ and $d_{\mathrm{H}}(X', Z)=1$. Let $P_{n-1}^{\mathrm{M}} = (X, Y) \to (X, X) \to (X, Z) \to (Z, X) \to (Z, Z) \to (Z, X') \to (X', Z) \to (X', X') \to (X', Y)$ and $P_n^{\mathrm{M}} = (X, Y) \to (X, X') \to (X', X) \to (X', Y)$. The discussion is similar if $Y^{(n-1)}= X'$ and $Y^{(n)}=X$.

We have $|P_{n-1}^{\mathrm{M}}|$, $|P_n^{\mathrm{M}}|$, and $|P_{n+1}^{\mathrm{M}}|$ at most $\max\{8, d_{\mathrm{H}}(X, X')+4\}$.

Case 1.3. $X'\neq Y$ and $X=Y'$ ($Y\neq Y'$ is implied because $X\neq Y$). W_{n-1} can be determined and we let $P_{n-1}^{\mathrm{M}}=R_{n-1}$. By Lemma 2, there is a shortest path from Y to X' that intersects with Q_r for some $1\leq r\leq n$, but does not intersect with Q_j for all $1\leq j\leq n$ and $j\neq r$.

If R_n does not exist, then either $Q_n= Y \to X' \to Y'$ or $Q_n= Y \to Y'$. If $Q_n= Y \to X' \to Y'$, then let $P_n^{\mathrm{M}} = (X, Y) \to (Y, X) \Rightarrow^* (Y, X') \to (X', Y) \to (X', X') \to (X', Y')$ and $P_{n+1}^{\mathrm{M}} = (X, Y) \to (X, X') \to (X', X)$ $(=(X', Y'))$. If $Q_n= Y \to Y'$, then let $P_n^{\mathrm{M}} = (X, Y) \to (Y, X) \Rightarrow^* (Y, X') \to (X', Y) \to (X', Y')$ and $P_{n+1}^{\mathrm{M}} = (X, Y) \Rightarrow^* (X, X') \to (X', X)$ $(=(X', Y'))$, where $(X, Y) \Rightarrow^* (X, X')$ is the same as the shortest path from Y to X' above. Since P_{n+1}^{M} and P_r^{M} conflict, P_r^{M} is changed as follows. By Lemma 2, we have $|Q_r|=3$. Without loss of generality, we assume $Q_r= Y \to Y^{(s)} \to Y'^{(s)} \to Y'$, where $1\leq s\leq n$. P_r^{M} is changed as $(X, Y) \to (X, Y') \to (X, Y'^{(s)}) \to (Y'^{(s)}, X) \Rightarrow^* (Y'^{(s)}, X') \to (X', Y'^{(s)}) \to (X', Y')$ whose length is $d_{\mathrm{H}}(X, X')+5=d_{\mathrm{H}}(X, X')+d_{\mathrm{H}}(Y, Y')+4$.

If R_n exists, then let $P_n^{\mathrm{M}}=R_n$. The construction of P_{n+1}^{M} is the same as above ($Q_n= Y \to Y'$), and P_r^{M} is changed as $(X, Y) \to (Y, X) \Rightarrow^* (Y, X') \to (X', Y) \Rightarrow (X', Y')$, where $\Rightarrow$ denotes a path (inside a cluster) and $(X', Y) \Rightarrow (X', Y')$ is the same as Q_r.

We have $|P_{n-1}^{\mathrm{M}}|$ and $|P_n^{\mathrm{M}}|$ at most $d_{\mathrm{H}}(X, X')+d_{\mathrm{H}}(Y, Y')+4$, and $|P_{n+1}^{\mathrm{M}}|=d_{\mathrm{H}}(Y, X')+1\leq d_{\mathrm{H}}(Y, X)+d_{\mathrm{H}}(X, X')+1=d_{\mathrm{H}}(Y, Y')+d_{\mathrm{H}}(X, X')+1$.

Case 1.4. $X'=Y$ and $X\neq Y'$ ($Y\neq Y'$ is implied because $X'\neq Y'$). Similar to Case 1.3.

Case 1.5. $X'=Y$ and $X=Y'$ ($Y\neq Y'$ is implied because $X\neq Y$). W_{n-1} can be determined and we let $P_{n-1}^{\mathrm{M}}=R_{n-1}$. Let $P_{n+1}^{\mathrm{M}} = (X, Y) \to (Y, X)$ $(=(X', Y'))$. If $d_{\mathrm{H}}(Y, Y')>1$, then W_n can be determined and we let $P_n^{\mathrm{M}}=R_n$. If $d_{\mathrm{H}}(Y, Y')=1$, then let $P_n^{\mathrm{M}} = ((X, Y)=) (Y', Y) \to (Y', Y') \to (\overline{Y'}, \overline{Y'}) \to (\overline{Y'}, \overline{Y}) \to (\overline{Y}, \overline{Y'}) \to (\overline{Y}, \overline{Y}) \to (Y, Y) \to (Y, Y')$ $(=(X', Y'))$. We have $|P_{n-1}^{\mathrm{M}}|$, $|P_n^{\mathrm{M}}|$, and $|P_{n+1}^{\mathrm{M}}|$ at most $\max\{7, d_{\mathrm{H}}(X, X')+d_{\mathrm{H}}(Y, Y')+4\}$.

Case 2. $X=Y$ and $X'\neq Y'$. P_{n-1}^{M}, P_n^{M}, and P_{n+1}^{M} can be obtained according to the value of $d_{\mathrm{H}}(Y, Y')$.

Case 2.1. $d_{\mathrm{H}}(Y, Y')=0$. We have $Y^{(n-1)} \notin \{X, X'\}$. Let $P_{n-1}^{\mathrm{M}}=S_{n-1}$. If $d_{\mathrm{H}}(Y, X')=1$, then let $P_n^{\mathrm{M}}=(X, Y) \to (X, X') \to (X', X)$ $(=(X', Y'))$ and $P_{n+1}^{\mathrm{M}}=((X, Y)=)\ (X, X) \to (\overline{X}, \overline{X}) \to (\overline{X}, \overline{X'}) \to (\overline{X'}, \overline{X}) \to (\overline{X'}, \overline{X'}) \to (X', X') \to (X', X)$ $(=(X', Y'))$.

If $d_{\mathrm{H}}(Y, X')>1$, then $Y^{(n)} \notin \{X, X'\}$ and let $P_n^{\mathrm{M}}=S_n$. Also let $P_{n+1}^{\mathrm{M}}=((X, Y)=)\ (X, X) \to (X, X^{(r)}) \Rightarrow^* (X, X') \to (X', X)$ $(=(X', Y'))$, where $d_{\mathrm{H}}(X, X')=1+d_{\mathrm{H}}(X^{(r)}, X')$ for some $1 \le r \le n$. Since P_{n+1}^{M} and P_r^{M} conflict, P_r^{M} is changed as $((X, Y)=)\ (X, X) \to (\overline{X}, \overline{X}) \to (\overline{X}, \overline{X^{(r)}}) \to (\overline{X^{(r)}}, \overline{X}) \to (\overline{X^{(r)}}, \overline{X^{(r)}}) \to (X^{(r)}, X^{(r)}) \Rightarrow^* (X^{(r)}, X') \to (X', X^{(r)}) \to (X', X)$ $(=(X', Y'))$ if $d_{\mathrm{H}}(X, X')<n$, and $((X, Y)=)\ (X, X) \to (\overline{X}, \overline{X})$ $(=(X', X')) \Rightarrow^* (X', X^{(r)}) \to (X', X)$ $(=(X', Y'))$ if $d_{\mathrm{H}}(X, X')=n$. The new P_r^{M} has length not greater than $n+5$.

We have $|P_{n-1}^{\mathrm{M}}|$ and $|P_n^{\mathrm{M}}|$ at most $d_{\mathrm{H}}(X, X')+4$, and $|P_{n+1}^{\mathrm{M}}|=\max\{6, d_{\mathrm{H}}(X, X')+1\}$.

Case 2.2. $d_{\mathrm{H}}(Y, Y')=1$. We have $|Q_{n-1}|=3$. Without loss of generality, suppose $Q_{n-1}=Y \to U \to V \to Y'$, where $U \ne X'$ and $V \ne X'$. If $\overline{X} \ne X'$ and $\overline{Y'} \ne X'$, then let $P_{n-1}^{\mathrm{M}}=(X, Y) \to (X, Y') \to (X, V) \to (V, X) \Rightarrow^* (V, X') \to (X', V) \to (X', Y')$ and $P_n^{\mathrm{M}}=(X, Y) \to (X, U) \to (U, X) \Rightarrow^* (U, X') \to (X', U) \to (X', Y) \to (X', Y')$. Besides, let P_{n+1}^{M} be the shorter one of the following two paths: $((X, Y)=)\ (X, X) \to (\overline{X}, \overline{X}) \to (\overline{X}, \overline{Y'}) \to (\overline{Y'}, \overline{X}) \to (\overline{Y'}, \overline{Y'}) \to (Y', Y') \Rightarrow^* (Y', X') \to (X', Y')$ and $((X, Y)=)\ (X, X) \to (\overline{X}, \overline{X}) \Rightarrow^* (\overline{X}, Y') \to (Y', \overline{X}) \Rightarrow^* (Y', X') \to (X', Y')$, where $\overline{X} \ne Y'$ because $d_{\mathrm{H}}(X, Y')=d_{\mathrm{H}}(Y, Y')=1$. The former has length $d_{\mathrm{H}}(Y', X')+6 \le d_{\mathrm{H}}(Y', X)+d_{\mathrm{H}}(X, X')+6=d_{\mathrm{H}}(X, X')+d_{\mathrm{H}}(Y, Y')+6$, and the latter has length $d_{\mathrm{H}}(\overline{X}, Y')+d_{\mathrm{H}}(\overline{X}, X')+3$.

If $\overline{X}=X'$ or $\overline{Y'}=X'$, then let $P_{n-1}^{\mathrm{M}}=(X, Y) \to (X, Y') \to (Y', X) \Rightarrow^* (Y', X') \to (X', Y')$ and $P_n^{\mathrm{M}}=(X, Y) \to (X, U) \to (U, X) \Rightarrow^* (U, X') \to (X', U) \to (X', Y) \to (X', Y')$. Besides, let $P_{n+1}^{\mathrm{M}}=((X, Y)=)\ (X, X) \to (\overline{X}, \overline{X})$ $(=(X', \overline{Y})) \Rightarrow^* (X', V) \to (X', Y')$ if $\overline{X}=X'$, and $((X, Y)=)\ (X, X) \to (\overline{X}, \overline{X}) \to (\overline{X}, \overline{Y'}) \to (\overline{Y'}, \overline{X})$ $(=(X', \overline{Y})) \Rightarrow^* (X', V) \to (X', Y')$ if $\overline{Y'}=X'$. P_{n+1}^{M} is disjoint with $P_1^{\mathrm{M}}, P_2^{\mathrm{M}}, \ldots, P_n^{\mathrm{M}}$ provided $(X', \overline{Y}) \Rightarrow^* (X', V)$ is disjoint with $Q_1, Q_2, \ldots, Q_{n-2}$ and does not contain Y and U. They are true because $d_{\mathrm{H}}(\overline{Y}, V)=n-2$, $d_{\mathrm{H}}(\overline{Y}, U)=n-1$, $d_{\mathrm{H}}(\overline{Y}, Y^{(i)})=n-1$, and $d_{\mathrm{H}}(\overline{Y}, Y'^{(i)}) \ge d_{\mathrm{H}}(\overline{Y}, Y')-1=n-2$ for all $1 \le i \le n$.

We have $|P_{n-1}^{\mathrm{M}}|$ and $|P_n^{\mathrm{M}}|$ at most $d_{\mathrm{H}}(X, X')+d_{\mathrm{H}}(Y, Y')+4$, and $|P_{n+1}^{\mathrm{M}}|$ at most $\max\{n+2, \min\{d_{\mathrm{H}}(X, X')+d_{\mathrm{H}}(Y, Y')+6, d_{\mathrm{H}}(\overline{X}, Y')+d_{\mathrm{H}}(\overline{Y}, X')+3\}\}$, where $d_{\mathrm{H}}(\overline{Y}, X')=d_{\mathrm{H}}(\overline{X}, X')$.

Case 2.3. $d_{\mathrm{H}}(Y, Y')=2$. W_{n-1} can be determined and we let $P_{n-1}^{\mathrm{M}}=R_{n-1}$. We have $|Q_n|=2$. If $Q_n= Y \to X' \to Y'$, then let $P_n^{\mathrm{M}} = (X, Y) \to (X, X') \to (X, Y') \to (Y', X) \Rightarrow^* (Y', X') \to (X', Y')$ and $P_{n+1}^{\mathrm{M}} = ((X, Y)=) (X, X) \to (\overline{X}, \overline{X}) \to (\overline{X}, \overline{X'}) \to (\overline{X'}, \overline{X}) \to (\overline{X'}, \overline{X'}) \to (X', X') \to (X', Y')$.

Otherwise ($Q_n \neq Y \to X' \to Y'$), W_n can be determined and we let $P_n^{\mathrm{M}}=R_n$. If $\overline{X} \neq X'$ and $\overline{Y'} \neq X'$, then let P_{n+1}^{M} be the shorter one of the following two paths: $((X, Y)=) (X, X) \to (\overline{X}, \overline{X}) \Rightarrow^* (\overline{X}, \overline{Y'}) \to (\overline{Y'}, \overline{X}) \Rightarrow^* (\overline{Y'}, \overline{Y'}) \to (Y', Y') \Rightarrow^* (Y', X') \to (X', Y')$ and $((X, Y)=) (X, X) \to (\overline{X}, \overline{X}) \Rightarrow^* (\overline{X}, Y') \to (Y', \overline{X}) \Rightarrow^* (Y', X') \to (X', Y')$, where $\overline{X} \neq Y'$ because $d_{\mathrm{H}}(X, Y')=d_{\mathrm{H}}(Y, Y')=2$ and $n \geq 3$. The former has length $d_{\mathrm{H}}(\overline{X}, \overline{Y'})+d_{\mathrm{H}}(\overline{X}, \overline{Y'})+d_{\mathrm{H}}(Y', X')+4=d_{\mathrm{H}}(Y', X')+8 \leq d_{\mathrm{H}}(Y', X)+d_{\mathrm{H}}(X, X')+8=d_{\mathrm{H}}(X, X')+d_{\mathrm{H}}(Y, Y')+8$ ($d_{\mathrm{H}}(\overline{X}, \overline{Y'})=2$ because $X=Y$ and $d_{\mathrm{H}}(Y, Y')=2$), and the latter has length $d_{\mathrm{H}}(\overline{X}, Y')+d_{\mathrm{H}}(\overline{X}, X')+3$.

If $\overline{X}=X'$ or $\overline{Y'}=X'$, then by Lemma 2 there is a shortest path from $\overline{Y}$ to Y' that intersects with Q_r for some $1 \leq r \leq n$, but does not intersect with Q_j for all $1 \leq j \leq n$ and $j \neq r$. Let $P_{n+1}^{\mathrm{M}} = ((X, Y)=) (X, X) \to (\overline{X}, \overline{X}) (=(X', \overline{Y})) \Rightarrow^* (X', Y')$ if $\overline{X}=X'$, and $((X, Y)=) (X, X) \to (\overline{X}, \overline{X}) (=(\overline{Y}, \overline{Y})) \Rightarrow^* (\overline{Y}, \overline{Y'}) \to (\overline{Y'}, \overline{Y}) (=(X', \overline{Y})) \Rightarrow^* (X', Y')$ if $\overline{Y'}=X'$, where $(X', \overline{Y}) \Rightarrow^* (X', Y')$ is the same as the shortest path from $\overline{Y}$ to Y' above. P_r^{M} is changed as $(X, Y) \Rightarrow (X, Y') \to (Y', X) \Rightarrow^* (Y', X') \to (Y', X')$, where $(X, Y) \Rightarrow (X, Y')$ is the same as Q_r.

We have $|P_{n-1}^{\mathrm{M}}|=|P_n^{\mathrm{M}}|=d_{\mathrm{H}}(X, X')+d_{\mathrm{H}}(Y, Y')+2$, and $|P_{n+1}^{\mathrm{M}}| \leq \max\{n+2, \min\{d_{\mathrm{H}}(X, X')+d_{\mathrm{H}}(Y, Y')+8, d_{\mathrm{H}}(\overline{X}, Y')+d_{\mathrm{H}}(\overline{Y}, X')+3\}$, where $d_{\mathrm{H}}(\overline{Y}, X')=d_{\mathrm{H}}(\overline{X}, X')$.

Case 2.4. $d_{\mathrm{H}}(Y, Y') \geq 3$. W_{n-1} can be determined and we let $P_{n-1}^{\mathrm{M}}=R_{n-1}$. Suppose, without loss of generality, that $Q_n= Y \to U \Rightarrow^* Y'$ does not contain X' and $\overline{U} \neq X'$. Then $W_n \neq U$ ($W_n \in Q_n - \{X, Y, X', Y'\}$) can be determined and we let $P_n^{\mathrm{M}}=R_n$. If $\overline{X}=X'$, then P_{n+1}^{M} can be obtained all the same as the situation of $\overline{X}=X'$ in Case 2.3.

If $\overline{X} \neq X'$, then let P_{n+1}^{M} be the shorter one of the following two paths: $((X, Y)=) (X, X) \to (\overline{X}, \overline{X}) \to (\overline{X}, \overline{U}) \to (\overline{U}, \overline{X}) \to (\overline{U}, \overline{U}) \to (U, U) \Rightarrow^* (U, Y') \to (Y', U) \Rightarrow^* (Y', X') \to (X', Y')$ and $((X, Y)=) (X, X) \to (\overline{X}, \overline{X}) \Rightarrow^* (\overline{X}, Y') \to (Y', \overline{X}) \Rightarrow^* (Y', X') \to (X', Y')$, where $(\overline{X}, \overline{X}) \Rightarrow^* (\overline{X}, Y') \to (Y', \overline{X}) \Rightarrow^* (Y', X')$ is replaced with $(\overline{X}, \overline{X}) \Rightarrow^* (\overline{X}, X')$ if $\overline{X}=Y'$. The former has length $d_{\mathrm{H}}(U, Y')+d_{\mathrm{H}}(U, X')+7 \leq d_{\mathrm{H}}(Y, Y')+d_{\mathrm{H}}(X, X')+7$ (because $d_{\mathrm{H}}(Y, Y')=1+d_{\mathrm{H}}(U, Y')$ and $d_{\mathrm{H}}(X, X')=d_{\mathrm{H}}(U, X')\pm 1$), and the latter has

length $d_{\mathrm{H}}(\overline{X}, Y')+d_{\mathrm{H}}(\overline{X}, X')+3$. We have $|P_{n-1}^{\mathrm{M}}|=|P_n^{\mathrm{M}}|=d_{\mathrm{H}}(X, X')+d_{\mathrm{H}}(Y, Y')+2$, and $|P_{n+1}^{\mathrm{M}}|=\min\{d_{\mathrm{H}}(X, X')+d_{\mathrm{H}}(Y, Y')+7, d_{\mathrm{H}}(\overline{X}, Y')+d_{\mathrm{H}}(\overline{Y}, X')+3\}$, where $d_{\mathrm{H}}(\overline{Y}, X')=d_{\mathrm{H}}(\overline{X}, X')$.

Case 3. $X\neq Y$ and $X'=Y'$. Similar to Case 2.

Case 4. $X=Y$ and $X'=Y'$. Since $X\neq X'$, we have $Y\neq Y'$. W_{n-1} can be determined and we let $P_{n-1}^{\mathrm{M}}=R_{n-1}$. If $d_{\mathrm{H}}(Y, Y')=1$, then let $P_n^{\mathrm{M}} = ((X, Y)=)\ (X, X) \to (X, X') \to (X', X) \to (X', X')\ (=(X', Y'))$. If $d_{\mathrm{H}}(Y, Y')\geq 2$, then W_n can be determined and we let $P_n^{\mathrm{M}}=R_n$. Also, let $P_{n+1}^{\mathrm{M}} = ((X, Y)=)\ (X, X) \to (\overline{X}, \overline{X}) \Rightarrow^* (\overline{X}, \overline{X'}) \to (\overline{X'}, \overline{X}) \Rightarrow^* (\overline{X'}, \overline{X'}) \to (X', X')\ (=(X', Y'))$ if $\overline{X}\neq X'$, and $(X, X) \to (\overline{X}, \overline{X})\ (=(X', Y'))$ if $\overline{X}=X'$. We have $|P_{n-1}^{\mathrm{M}}|$, $|P_n^{\mathrm{M}}|$, and $|P_{n+1}^{\mathrm{M}}|$ at most $d_{\mathrm{H}}(X, X')+d_{\mathrm{H}}(Y, Y')+4$.

3.2 Construction method (A)

The construction method (A) can be applied when $f_2\geq 2$. According to Lemma 1, we have $d_{\mathrm{H}}(X, Y)\geq 2$, $d_{\mathrm{H}}(X', Y')\geq 2$, and $d_{\mathrm{H}}(Y, Y')\geq 2$. We use $P_1^{\mathrm{A}}, P_2^{\mathrm{A}}, \ldots, P_{n+1}^{\mathrm{A}}$ to denote the resulting $n+1$ disjoint paths. Let $P_{i,j}= (X, Y) \to (X, Y^{(i)}) \to (Y^{(i)}, X) \Rightarrow^* (Y^{(i)}, Y'^{(j)}) \to (Y'^{(j)}, Y^{(i)}) \Rightarrow^* (Y'^{(j)}, X') \to (X', Y'^{(j)}) \to (X', Y')$ (refer to Figure 4), where $1\leq i\leq n$, $1\leq j\leq n$, and $\{Y^{(i)}, Y'^{(j)}\}\cap\{X, X', Y, Y'\}$ is empty. If $Y^{(i)}=Y'^{(j)}$, then $(Y^{(i)}, X) \Rightarrow^* (Y^{(i)}, Y'^{(j)}) \to (Y'^{(j)}, Y^{(i)}) \Rightarrow^* (Y'^{(j)}, X')$ is replaced with $(Y^{(i)}, X) \Rightarrow^* (Y'^{(j)}, X')$. P_{i_1,j_1} and P_{i_2,j_2} are disjoint if $\{Y^{(i_1)}, Y^{(j_1)}\}\cap\{Y^{(i_2)}, Y^{(j_2)}\}$ is empty. We have $|P_{i,j}|=d_{\mathrm{H}}(X, Y'^{(j)})+d_{\mathrm{H}}(X', Y^{(i)})+5\leq d_{\mathrm{H}}(X, Y')+d_{\mathrm{H}}(X', Y)+7$ if $Y^{(i)}\neq Y'^{(j)}$, and $d_{\mathrm{H}}(X, X')+4\leq d_{\mathrm{H}}(X, Y'^{(j)})+d_{\mathrm{H}}(X', Y^{(i)})+4<d_{\mathrm{H}}(X, Y')+d_{\mathrm{H}}(X', Y)+7$ if $Y^{(i)}=Y'^{(j)}$. When $i\in F_4$ and $j\in F_4$, we have $|P_{i,j}|=d_{\mathrm{H}}(X, Y')+d_{\mathrm{H}}(X', Y)+3$ because $x_j\neq y'_j$ implies $d_{\mathrm{H}}(X, Y'^{(j)})=d_{\mathrm{H}}(X, Y')-1$ and $x'_i\neq y_i$ implies $d_{\mathrm{H}}(X', Y^{(i)})=d_{\mathrm{H}}(X', Y)-1$.

$P_1^{\mathrm{A}}, P_2^{\mathrm{A}}, \ldots, P_n^{\mathrm{A}}$ can be obtained, depending on whether $d_{\mathrm{H}}(X, Y')\neq 1$ and $d_{\mathrm{H}}(X', Y)\neq 1$ or not. If $d_{\mathrm{H}}(X, Y')\neq 1$ and $d_{\mathrm{H}}(X', Y)\neq 1$, then $\{Y^{(i)}, Y'^{(j)}\}\cap\{X, X', Y, Y'\}$ is empty for all $1\leq i\leq n$ and $1\leq j\leq n$. For all $1\leq k\leq n$, we let $P_k^{\mathrm{A}}=P_{k,u}$ if $Y^{(k)}=Y'^{(u)}$ for some $1\leq u\leq n$, and $P_k^{\mathrm{A}}=P_{k,k}$ otherwise. If $d_{\mathrm{H}}(X, Y')\neq 1$ and $d_{\mathrm{H}}(X', Y)=1$, then $X'=Y^{(r)}$ for some $1\leq r\leq n$. We let $P_r^{\mathrm{A}} = (X, Y) \to (X, X') \to (X', X) \Rightarrow^* (X', Y'^{(r)}) \to (X', Y')$, and for all $k\in\{1, 2, \ldots, n\}-\{r\}$, let $P_k^{\mathrm{A}}=P_{k,u}$ if $Y^{(k)}=Y'^{(u)}$ for some $1\leq u\leq n$, and $P_k^{\mathrm{A}}=P_{k,k}$ otherwise. If $d_{\mathrm{H}}(X, Y')=1$ and $d_{\mathrm{H}}(X', Y)\neq 1$, the discussion is similar. If $d_{\mathrm{H}}(X, Y')=1$ and $d_{\mathrm{H}}(X', Y)=1$, then $X'=Y^{(s)}$ and $X=Y'^{(t)}$ for some $1\leq s\leq n$ and $1\leq t\leq n$. We let $P_s^{\mathrm{A}} = (X, Y) \to (X, X') \to (X', X) \to (X', Y')$, $P_t^{\mathrm{A}}=P_{t,s}$ if $t\neq s$, and for all $k\in\{1, 2, \ldots,$

$n\}-\{s, t\}$, $P_k^{\mathrm{A}}=P_{k,u}$ if $Y^{(k)}=Y'^{(u)}$ for some $1\le u\le n$, and $P_k^{\mathrm{A}}=P_{k,k}$ otherwise. These paths have lengths at most $d_{\mathrm{H}}(X, Y')+d_{\mathrm{H}}(X', Y)+7$.

P_{n+1}^{A} can be obtained, depending on whether $X'\neq Y$ and $X\neq Y'$ or not. If $X'\neq Y$ and $X\neq Y'$, then let $P_{n+1}^{\mathrm{A}}=(X, Y)\to(Y, X)\Rightarrow^*(Y, Y')\to(Y', Y)\Rightarrow^*(Y', X')\to(X', Y')$. If $X'\neq Y$ and $X=Y'$, then let $P_{n+1}^{\mathrm{A}}=(X, Y)\to(X, Y^{(q)})\Rightarrow^*(X, X')\to(X', X)$ for some $1\le q\le n$, which conflicts with P_q^{A}. P_q^{A} is changed as $(X, Y)\to(Y, X)\Rightarrow^*(Y, Y'^{(q)})\to(Y'^{(q)}, Y)\Rightarrow^*(Y'^{(q)}, X')\to(X', Y'^{(q)})\to(X', Y')$ whose length is at most $d_{\mathrm{H}}(X, Y')+d_{\mathrm{H}}(Y, X')+5$. The discussion is similar if $X'=Y$ and $X\neq Y'$. If $X'=Y$ and $X=Y'$, then let $P_{n+1}^{\mathrm{A}}=(X, X')\to(X', X)$. We have $|P_{n+1}^{\mathrm{A}}|\le d_{\mathrm{H}}(X, Y')+d_{\mathrm{H}}(X', Y)+5$.

3.3 Construction method (B)

The construction method (B) can be applied when $f_4\ge 2$. By $P_1^{\mathrm{B}}, P_2^{\mathrm{B}}, \ldots, P_{n+1}^{\mathrm{B}}$ we denote the resulting $n+1$ disjoint paths. First we determine M as follows: $M=Y$ if $X=Y$, $M=\overline{Y'}$ if $X'=Y'$, and M is an arbitrary element of $Q_{\min}$ else. Suppose $X=x_1x_2\ldots x_n$, $Y=y_1y_2\ldots y_n$, $X'=x'_1x'_2\ldots x'_n$, $Y'=y'_1y'_2\ldots y'_n$, and $M=m_1m_2\ldots m_n$. When $X=Y$, we have $(y_i\oplus m_i)+(x_i\oplus m_i)+(\overline{m_i}\oplus x'_i)+(\overline{m_i}\oplus y'_i)\le 2$ if $m_i=y_i$, and ≥ 2 if $m_i\neq y_i$, where $1\le i\le n$. Hence $M=Y\in Q_{\min}$. Similarly, when $X'=Y'$, we have $M=\overline{Y'}\in Q_{\min}$.

For all $1\le i\le n$, let P_i^{B} be the path P_3 with $T=M^{(i)}$. Refer to Figure 5. As a consequence of Saad and Schultz's best (Y, M)-container (refer to Figure 2), there are n disjoint shortest paths from (X, Y) to $(X, M^{(1)})$, $(X, M^{(2)})$, …, $(X, M^{(n)})$ (and from $(X', \overline{M^{(1)}})$, $(X', \overline{M^{(2)}})$, …, $(X', \overline{M^{(n)}})$ to (X', Y')), respectively. We have

$$\begin{aligned}|P_i^{\mathrm{B}}| &\le d_{\mathrm{H}}(Y, M^{(i)})+d_{\mathrm{H}}(X, M^{(i)})+d_{\mathrm{H}}(\overline{M^{(i)}}, X')+d_{\mathrm{H}}(\overline{M^{(i)}}, Y')+3\\ &= d_{\mathrm{H}}(Y, M)+d_{\mathrm{H}}(X, M)+d_{\mathrm{H}}(\overline{M}, X')+d_{\mathrm{H}}(\overline{M}, Y')+3+\Delta,\end{aligned}$$

where $\Delta=0$ if $i\in F_1\cup F_2\cup F_3$, $\Delta=4$ if $i\in F_4$, and $\Delta=2$ if $i\in F_5\cup F_6\cup F_7\cup F_8$.

P_{n+1}^{B} whose length is at most $d_{\mathrm{H}}(Y, M)+d_{\mathrm{H}}(X, M)+d_{\mathrm{H}}(\overline{M}, X')+d_{\mathrm{H}}(\overline{M}, Y')+5$ can be obtained, depending on whether $X\neq Y$ and $X'\neq Y'$ or not.

Case 1. $X\neq Y$ and $X'\neq Y'$. The construction further depends on whether $Y\notin\{M^{(1)}, M^{(2)}, \ldots, M^{(n)}\}$ and $Y'\notin\{\overline{M^{(1)}}, \overline{M^{(2)}}, \ldots, \overline{M^{(n)}}\}$ or not.

Case 1.1. $Y \notin \{M^{(1)}, M^{(2)}, \ldots, M^{(n)}\}$ and $Y' \notin \{\overline{M^{(1)}}, \overline{M^{(2)}}, \ldots, \overline{M^{(n)}}\}$. Let $P^B_{n+1} = (X, Y) \to (Y, X) \Rightarrow^* (Y, M) \to (M, Y) \Rightarrow^* (M, M) \to (\overline{M}, \overline{M}) \Rightarrow^* (\overline{M}, Y') \to (Y', \overline{M}) \Rightarrow^* (Y', X') \to (X', Y')$. When $M=Y$, $(Y, M) \to (M, Y) \Rightarrow^* (M, M)$ is replaced with (Y, Y). When $\overline{M}=Y'$, $(\overline{M}, \overline{M}) \Rightarrow^* (\overline{M}, Y') \to (Y', \overline{M})$ is replaced with (Y', Y').

Arbitrarily determine $1 \le r \le n$ so that $d_{\mathrm{H}}(Y, X)=d_{\mathrm{H}}(Y, X^{(r)})+1$. When $M=X$ and $\overline{M} \ne X'$, $(X, Y) \to (Y, X) \Rightarrow^* (Y, M) \to (M, Y) \Rightarrow^* (M, M)$ is replaced with $(X, Y) \Rightarrow^* (X, X^{(r)}) \to (X, X)$, which conflicts with P^B_r. P^B_r is changed as $(X, Y) \to (Y, X) \to (Y, X^{(r)}) \to (X^{(r)}, Y) \Rightarrow^* (X^{(r)}, X^{(r)}) \to (\overline{X^{(r)}}, \overline{X^{(r)}}) \Rightarrow^* (\overline{X^{(r)}}, X') \to (X', \overline{X^{(r)}}) \Rightarrow^* (X', Y')$ whose length is at most $(d_{\mathrm{H}}(Y, X)-1)+(d_{\mathrm{H}}(\overline{X}, X')+1)+(d_{\mathrm{H}}(\overline{X}, Y')+1)+5=d_{\mathrm{H}}(Y, X)+d_{\mathrm{H}}(\overline{X}, X')+d_{\mathrm{H}}(\overline{X}, Y')+6$ $(<d_{\mathrm{H}}(Y, M)+d_{\mathrm{H}}(X, M)+d_{\mathrm{H}}(\overline{M}, X')+d_{\mathrm{H}}(\overline{M}, Y')+7)$. The discussion is similar if $M \ne X$ and $\overline{M}=X'$.

When $M=X$ and $\overline{M}=X'$, $(X, Y) \to (Y, X) \Rightarrow^* (Y, M) \to (M, Y) \Rightarrow^* (M, M)$ is replaced with $(X, Y) \Rightarrow^* (X, X^{(r)}) \to (X, X)$ and $(\overline{M}, \overline{M}) \Rightarrow^* (\overline{M}, Y') \to (Y', \overline{M}) \Rightarrow^* (Y', X') \to (X', Y')$ is replaced with $(X', X') \to (X', X'^{(r)}) \Rightarrow^* (X', Y')$. P^{B}_r is changed as $(X, Y) \to (Y, X) \to (Y, X^{(r)}) \to (X^{(r)}, Y) \Rightarrow^* (X^{(r)}, X^{(r)}) \to (\overline{X^{(r)}}, \overline{X^{(r)}})$ $(=(X'^{(r)}, X'^{(r)})) \Rightarrow^* (X'^{(r)}, Y') \to (Y', X'^{(r)}) \to (Y', X') \to (X', Y')$ whose length is at most $d_{\mathrm{H}}(Y, X)+d_{\mathrm{H}}(X', Y')+7$ $(\le d_{\mathrm{H}}(Y, M)+d_{\mathrm{H}}(X, M)+d_{\mathrm{H}}(\overline{M}, X')+d_{\mathrm{H}}(\overline{M}, Y')+7)$.

Case 1.2. $Y \in \{M^{(1)}, M^{(2)}, \ldots, M^{(n)}\}$ and $Y' \notin \{\overline{M^{(1)}}, \overline{M^{(2)}}, \ldots, \overline{M^{(n)}}\}$. Let $P^{\mathrm{B}}_{n+1} = (X, Y) \to (X, M) \to (M, X) \Rightarrow^* (M, M) \to (\overline{M}, \overline{M}) \Rightarrow^* (\overline{M}, Y') \to (Y', \overline{M}) \Rightarrow^* (Y', X') \to (X', Y')$. When $M=X$, $(X, M) \to (M, X) \Rightarrow^* (M, M)$ is replaced with (X, X). When $\overline{M}=Y'$, $(\overline{M}, \overline{M}) \Rightarrow^* (\overline{M}, Y') \to (Y', \overline{M})$ is replaced with (Y', Y'). When $\overline{M}=X'$, $(\overline{M}, \overline{M}) \Rightarrow^* (\overline{M}, Y') \to (Y', \overline{M}) \Rightarrow^* (Y', X') \to (X', Y')$ is replaced with $(X', X') \to (X', X'^{(s)}) \Rightarrow^* (X', Y')$ for some $s \in \{1, 2, \ldots, n\}-F_4$. P^{B}_s is changed as $(X, Y) \Rightarrow^* (X, \overline{X'^{(s)}}) \to (\overline{X'^{(s)}}, X) \Rightarrow^* (\overline{X'^{(s)}}, \overline{X'^{(s)}}) \to (X'^{(s)}, X'^{(s)}) \Rightarrow^* (X'^{(s)}, Y') \to (Y', X'^{(s)}) \to (Y', X') \to (X', Y')$ whose length is $d_{\mathrm{H}}(Y, \overline{X'^{(s)}})+d_{\mathrm{H}}(X, \overline{X'^{(s)}})+d_{\mathrm{H}}(X'^{(s)}, Y')+5 \le d_{\mathrm{H}}(Y, \overline{X'})+d_{\mathrm{H}}(X, \overline{X'})+d_{\mathrm{H}}(X', Y')+6$ $(=d_{\mathrm{H}}(Y, M)+d_{\mathrm{H}}(X, M)+d_{\mathrm{H}}(\overline{M}, X')+d_{\mathrm{H}}(\overline{M}, Y')+6)$.

Case 1.3. $Y \notin \{M^{(1)}, M^{(2)}, \ldots, M^{(n)}\}$ and $Y' \in \{\overline{M^{(1)}}, \overline{M^{(2)}}, \ldots, \overline{M^{(n)}}\}$. Similar to Case 1.2.

Case 1.4. $Y \in \{M^{(1)}, M^{(2)}, \ldots, M^{(n)}\}$ and $Y' \in \{\overline{M^{(1)}}, \overline{M^{(2)}}, \ldots, \overline{M^{(n)}}\}$. Let $P^{\mathrm{B}}_{n+1} = (X, Y) \to (X, M) \to (M, X) \Rightarrow^* (M, M) \to (\overline{M}, \overline{M}) \Rightarrow^* (\overline{M}, X') \to (X', \overline{M}) \to (X', Y')$. When $M=X$, $(X, M) \to (M, X) \Rightarrow^* (M, M)$ is replaced with (X, X). When $\overline{M}=X'$, $(\overline{M}, \overline{M}) \Rightarrow^* (\overline{M}, X') \to (X', \overline{M})$ is replaced with (X', X').

Case 2. $X=Y$ and $X' \neq Y'$. The construction depends on whether $Y' \in \{\overline{M^{(1)}}, \overline{M^{(2)}}, \ldots, \overline{M^{(n)}}\}$ or not ($Y=M$ because $X=Y$). If $Y' \in \{\overline{M^{(1)}}, \overline{M^{(2)}}, \ldots, \overline{M^{(n)}}\}$, then let $P^{B}_{n+1} = ((X, Y)=)\ (Y, Y) \to (\overline{Y}, \overline{Y}) \Rightarrow^* (\overline{Y}, X') \to (X', \overline{Y}) \to (X', Y')$. When $\overline{Y}=X'$, $(\overline{Y}, \overline{Y}) \Rightarrow^* (\overline{Y}, X') \to (X', \overline{Y})$ is replaced with $(\overline{Y}, \overline{Y})$.

If $Y' \notin \{\overline{M^{(1)}}, \overline{M^{(2)}}, \ldots, \overline{M^{(n)}}\}$, then let $P^{\mathrm{B}}_{n+1} = ((X, Y)=)\ (Y, Y) \to (\overline{Y}, \overline{Y}) \Rightarrow^* (\overline{Y}, Y') \to (Y', \overline{Y}) \Rightarrow^* (Y', X') \to (X', Y')$. When $\overline{Y}=Y'$, $(\overline{Y}, \overline{Y}) \Rightarrow^* (\overline{Y}, Y') \to (Y', \overline{Y}) \Rightarrow^* (Y', X')$ is replaced with $(\overline{Y}, \overline{Y}) \Rightarrow^* (\overline{Y}, X')$. When $\overline{Y}=X'$, $(\overline{Y}, \overline{Y}) \Rightarrow^* (\overline{Y}, Y') \to (Y', \overline{Y}) \Rightarrow^* (Y', X') \to (X', Y')$ is replaced with $(X', X') \to (X', X'^{(t)}) \Rightarrow^* (X', Y')$, where $1 \le t \le n$ and $d_{\mathrm{H}}(X', Y')=1+d_{\mathrm{H}}(X'^{(t)}, Y')$. P^{B}_{t} is changed as $((X, Y)=)\ (Y, Y) \to (Y, Y^{(t)}) \to (Y^{(t)}, Y) \to (Y^{(t)}, Y^{(t)}) \to (\overline{Y^{(t)}}, \overline{Y^{(t)}})\ (=(X'^{(t)}, X'^{(t)})) \Rightarrow^* (X'^{(t)}, Y') \to (Y', X'^{(t)}) \to (Y', X') \to (X', Y')$ whose length is at most $d_{\mathrm{H}}(X', Y')+6$ ($<d_{\mathrm{H}}(Y, M)+d_{\mathrm{H}}(X, M)+d_{\mathrm{H}}(\overline{M}, X')+d_{\mathrm{H}}(\overline{M}, Y')+7$).

Case 3. $X \neq Y$ and $X'=Y'$. Similar to Case 2.

Case 4. $X=Y$ and $X'=Y'$. If $Y' \in \{\overline{M^{(1)}}, \overline{M^{(2)}}, \ldots, \overline{M^{(n)}}\}$, then let $P^{\mathrm{B}}_{n+1} = ((X, Y)=)\ (Y, Y) \to (\overline{Y}, \overline{Y}) \Rightarrow^* (\overline{Y}, Y') \to (Y', \overline{Y}) \to (Y', Y')\ (=(X', Y'))$. If $Y' \notin \{\overline{M^{(1)}}, \overline{M^{(2)}}, \ldots, \overline{M^{(n)}}\}$ and $Y=\overline{Y'}$, then let $P^{\mathrm{B}}_{n+1} = ((X, Y)=)\ (Y, Y) \to (Y', Y')\ (=(X', Y'))$. If $Y' \notin \{\overline{M^{(1)}}, \overline{M^{(2)}}, \ldots, \overline{M^{(n)}}\}$ and $Y \neq \overline{Y'}$, then let $P^{\mathrm{B}}_{n+1} = ((X, Y)=)\ (Y, Y) \to (\overline{Y}, \overline{Y}) \Rightarrow^* (\overline{Y}, Y') \to (Y', \overline{Y}) \to (Y', \overline{Y^{(u)}}) \Rightarrow^* (Y', Y')\ (=(X', Y'))$, where $1 \le u \le n$ and $d_{\mathrm{H}}(\overline{Y}, Y')=1+d_{\mathrm{H}}(\overline{Y^{(u)}}, Y')$. P^{B}_{u} is changed as $((X, Y)=)\ (Y, Y) \to (Y, Y^{(u)}) \Rightarrow^* (Y, \overline{Y'}) \to (\overline{Y'}, Y) \Rightarrow^* (\overline{Y'}, \overline{Y'}) \to (Y', Y')\ (=(X', Y'))$ whose length is at most $d_{\mathrm{H}}(Y, \overline{Y'})+d_{\mathrm{H}}(Y, \overline{Y'})+2$ ($<d_{\mathrm{H}}(Y, M)+d_{\mathrm{H}}(X, M)+d_{\mathrm{H}}(\overline{M}, X')+d_{\mathrm{H}}(\overline{M}, Y')+7$ because $Y=M$).

For all $1 \le i \le n$ and $1 \le j \le n$, P^{B}_{i} and P^{B}_{j} with $i \neq j$ are disjoint provided $\{M^{(i)}, M^{(j)}\} \cap \{X', Y', \overline{X}, \overline{Y}\}$ is empty, and P^{B}_{i} and P^{B}_{n+1} are disjoint provided $\{M, M^{(i)}\} \cap \{X', Y', \overline{X}, \overline{Y}\}$ is empty. Since $M \in Q_{\min}$, the following lemma assures that $P^{\mathrm{B}}_{1}, P^{\mathrm{B}}_{2}, \ldots, P^{\mathrm{B}}_{n+1}$ are disjoint.

Lemma 4. Suppose $M \in Q_{\min}$. $\{M, M^{(i)}\} \cap \{\overline{X}, \overline{Y}, X', Y'\}$ is empty if $f_4 \ge 2$ or $f_4=1$ and $i \in \{1, 2, \ldots, n\} - F_4$.

Proof. Suppose $X=x_1x_2\ldots x_n$, $Y=y_1y_2\ldots y_n$, $X'=x'_1x'_2\ldots x'_n$, $Y'=y'_1y'_2\ldots y'_n$, and $M=m_1m_2\ldots m_n$. If $f_4=1$, then

$F_4=\{r\}$ for some $1\le r\le n$. We have $x_r=y_r=\overline{x'_r}=\overline{y'_r}$. Further, $M\in Q_{\min}$ implies $m_r=x_r=y_r$. Hence M and $M^{(i)}$ differ from $\overline{X}$, $\overline{Y}$, X', and Y' at the rth bit position for all $i\in\{1, 2, \ldots, n\}-\{r\}$. On the other hand, if $f_4\ge 2$, then assume $\{u, v\}\subseteq F_4$, where $1\le u\le n$, $1\le v\le n$, and $u\ne v$. Similarly, we have $m_u=x_u=y_u=\overline{x'_u}=\overline{y'_u}$ and $m_v=x_v=y_v=\overline{x'_v}=\overline{y'_v}$. Hence, $M\notin\{\overline{X}, \overline{Y}, X', Y'\}$, $M^{(u)}$ differs from $\overline{X}$, $\overline{Y}$, X', and Y' at the vth bit position, and $M^{(k)}$ differs from $\overline{X}$, $\overline{Y}$, X', and Y' at the uth bit position for all $k\in\{1, 2, \ldots, n\}-\{u\}$. □

Lemma 4 (the situation of $f_4=1$) will be used again in Section 3.4.

3.4 Construction method (C)

The construction method (C) can be applied when $f_2\ge 1$, $f_4\ge 1$, $f_2+f_4\ge 3$, $f_3+f_4\ge 2$, and $\{X, X'\}\cap\{Y, Y'\}$ is empty. We use P_1^{C}, P_2^{C}, …, P_{n+1}^{C} to denote the resulting $n+1$ disjoint paths. Let $P_i^{\mathrm{C}}=P_{i,i}$ for all $i\in F_4$ whose length is $d_{\mathrm{H}}(X', Y)+d_{\mathrm{H}}(X, Y')+3$. Recall that $P_{i,i}$ requires $\{Y^{(i)}, Y'^{(i)}\}\cap\{X, X', Y, Y'\}$ empty, which holds as a consequence of $i\in F_4$, $f_3+f_4\ge 2$, and $f_2+f_4\ge 3$.

Then, determine $M=m_1m_2\ldots m_n$ so that $m_k=\overline{y_k}$ if $k\in F_8$ and $m_k=y_k$ if $k\in\{1, 2, \ldots, n\}-F_8$. It is not difficult to see $M\in Q_{\min}$. When $f_8=0$, we have $M=Y$. Let $P_j^{\mathrm{C}}=P_j^{\mathrm{B}}$ for all $j\in\{1, 2, \ldots, n\}-F_4$ whose length is $d_{\mathrm{H}}(Y, M)+d_{\mathrm{H}}(X, M)+d_{\mathrm{H}}(\overline{M}, X')+d_{\mathrm{H}}(\overline{M}, Y')+3$ if $j\in F_1\cup F_2\cup F_3$, and $d_{\mathrm{H}}(Y, M)+d_{\mathrm{H}}(X, M)+d_{\mathrm{H}}(\overline{M}, X')+d_{\mathrm{H}}(\overline{M}, Y')+5$ if $j\in F_5\cup F_6\cup F_7\cup F_8$. P_j^{C}'s are disjoint for the following reason. Recall that P_j^{B}'s are disjoint provided $M^{(j)}\notin\{\overline{X}, \overline{Y}, X', Y'\}$. The latter holds by Lemma 4 because $f_4\ge 1$ and $j\notin F_4$ (the construction method (B) requires $f_4\ge 2$).

P_i^{C} and P_j^{C} are disjoint provided (1) $(X, Y)\to(X, Y^{(i)})$ and $(X, Y)\Rightarrow^*(X, M^{(j)})$ are disjoint, (2) $(X', Y'^{(i)})\to(X', Y')$ and $(X', \overline{M^{(j)}})\Rightarrow^*(X', Y')$ are disjoint, and (3) $\{Y^{(i)}, Y'^{(i)}\}\cap\{M^{(j)}, \overline{M^{(j)}}\}$ is empty. Since $i\in F_4$, we have $y_i=m_i$. According to the construction of Saad and Schultz's best (Y, M)-container (refer to Figure 2), we have $(X, Y)\Rightarrow^*(X, M^{(i)})=(X, Y)\to(X, Y^{(i)})\Rightarrow^*(X, M^{(i)})$, which is disjoint with $(X, Y)\Rightarrow^*(X, M^{(j)})$. Hence (1) is true. Similarly, we have $y'_i=\overline{m_i}$ (because $i\in F_4$) and $(X', \overline{M^{(i)}})\Rightarrow^*(X', Y')=(X', \overline{M^{(i)}})\Rightarrow^*(X', Y'^{(i)})\to(X', Y')$, which is disjoint with $(X', \overline{M^{(j)}})\Rightarrow^*(X', Y')$. Hence (2) is also true.

(1) and (2) can assure $Y^{(i)}\ne M^{(j)}$ and $Y'^{(i)}\ne\overline{M^{(j)}}$, respectively. It is easy to see $y_k=m_k$ for all $k\in F_2\cup F_4$. Since $f_2+f_4\ge 3$, there exists $s\in F_2\cup F_4-\{i, j\}$ so that $Y^{(i)}$ and $\overline{M^{(j)}}$ differ at the sth bit position, i.e., $Y^{(i)}\ne$

$\overline{M^{(j)}}$. Similarly, we have $y'_k \neq m_k$ for all $k \in F_2 \cup F_4$, and $f_2+f_4 \geq 3$ can assure the existence of $t \in F_2 \cup F_4 - \{i, j\}$ so that $Y'^{(i)}$ and $M^{(j)}$ differ at the tth bit position, i.e., $Y'^{(i)} \neq M^{(j)}$. Hence (3) is true.

The construction of P^{C}_{n+1} depends on whether $Y \notin \{M^{(1)}, M^{(2)}, \ldots, M^{(n)}\}$ and $Y' \notin \{\overline{M^{(1)}}, \overline{M^{(2)}}, \ldots, \overline{M^{(n)}}\}$ or not. If $Y \notin \{M^{(1)}, M^{(2)}, \ldots, M^{(n)}\}$ and $Y' \notin \{\overline{M^{(1)}}, \overline{M^{(2)}}, \ldots, \overline{M^{(n)}}\}$, then let $P^{\mathrm{C}}_{n+1} = (X, Y) \to (Y, X) \Rightarrow^* (Y, Y') \to (Y', Y) \Rightarrow^* (Y', X') \to (X', Y')$ whose length is $d_{\mathrm{H}}(X, Y')+d_{\mathrm{H}}(Y, X')+3$. P^{C}_{n+1} is disjoint with P^{C}_i provided $\{Y, Y'\} \cap \{Y^{(i)}, Y'^{(i)}\}$ is empty, and disjoint with P^{C}_j provided $\{Y, Y'\} \cap \{M^{(j)}, \overline{M^{(j)}}\}$ is empty. Since $f_2+f_4 \geq 3$, we have $d_{\mathrm{H}}(Y, Y') \geq 3$, which implies $\{Y, Y'\} \cap \{Y^{(i)}, Y'^{(i)}\}$ empty. Lemma 4 assures that $\{Y, Y'\} \cap \{M^{(j)}, \overline{M^{(j)}}\}$ is empty.

If $Y \in \{M^{(1)}, M^{(2)}, \ldots, M^{(n)}\}$ or $Y' \in \{\overline{M^{(1)}}, \overline{M^{(2)}}, \ldots, \overline{M^{(n)}}\}$, then let $P^{\mathrm{C}}_{n+1} = P^{\mathrm{B}}_{n+1}$. Since $f_2 \geq 1$, we have $M \notin \{X, \overline{X'}\}$. Hence no change of P^{C}_s for some $s \in \{1, 2, \ldots, n\} - F_4$ is necessary (refer to Section 3.3). We have $|P^{\mathrm{C}}_{n+1}| = d_{\mathrm{H}}(Y, M)+d_{\mathrm{H}}(X, M)+d_{\mathrm{H}}(\overline{M}, X')+d_{\mathrm{H}}(\overline{M}, Y')+5$ if $Y \neq M$ and $Y' \neq \overline{M}$, and $d_{\mathrm{H}}(Y, M)+d_{\mathrm{H}}(X, M)+d_{\mathrm{H}}(\overline{M}, X')+d_{\mathrm{H}}(\overline{M}, Y')+3$ if $Y=M$ or $Y'=\overline{M}$. P^{C}_{n+1} and P^{C}_j are disjoint for the following reason. Recall that P^{B}_{n+1} and P^{B}_j are disjoint provided $\{M, M^{(j)}\} \cap \{\overline{X}, \overline{Y}, X', Y'\}$ is empty. The latter holds by Lemma 4 because $f_4 \geq 1$ and $j \notin F_4$. On the other hand, P^{C}_{n+1} is disjoint with P^{C}_i provided $\{Y, Y'\} \cap \{Y^{(i)}, Y'^{(i)}\}$ is empty and $\{M, \overline{M}\} \cap \{Y^{(i)}, Y'^{(i)}\}$ is empty. Since $f_2+f_4 \geq 3$, we have $d_{\mathrm{H}}(Y, Y') \geq 3$ which implies $\{Y, Y'\} \cap \{Y^{(i)}, Y'^{(i)}\}$ is empty. Now that $i \in F_4$, M ($\overline{M}$) differs from $Y^{(i)}$ ($Y'^{(i)}$) at the ith bit position. Since $f_2+f_4 \geq 3$, there exists $t \in F_2 \cup F_4 - \{i\}$ so that M ($\overline{M}$) differs from $Y'^{(i)}$ ($Y^{(i)}$) at the tth bit position. Hence $\{M, \overline{M}\} \cap \{Y^{(i)}, Y'^{(i)}\}$ is empty.

According to the discussion above, $P^{\mathrm{C}}_1, P^{\mathrm{C}}_2, \ldots, P^{\mathrm{C}}_{n+1}$ have lengths at most $\max\{d_{\mathrm{H}}(Y, M)+d_{\mathrm{H}}(X, M)+d_{\mathrm{H}}(\overline{M}, X')+d_{\mathrm{H}}(\overline{M}, Y')+3, d_{\mathrm{H}}(X', Y)+d_{\mathrm{H}}(X, Y')+3\}$ if $f_5+f_6+f_7+f_8=0$ ($Y=M$ is implied because $f_8=0$), and $\max\{d_{\mathrm{H}}(Y, M)+d_{\mathrm{H}}(X, M)+d_{\mathrm{H}}(\overline{M}, X')+d_{\mathrm{H}}(\overline{M}, Y')+5, d_{\mathrm{H}}(X', Y)+d_{\mathrm{H}}(X, Y')+3\}$ if $f_5+f_6+f_7+f_8 \neq 0$.

3.5 Construction method (D)

The construction method (D) can be applied when $f_1=0, f_2+f_3 \geq 2, f_3+f_4 \geq 2, n > d_{\mathrm{H}}(Y, Y') \geq 1$, and $\{X, X'\} \cap \{Y, Y'\}$ is empty. We use $P^{\mathrm{D}}_1, P^{\mathrm{D}}_2, \ldots, P^{\mathrm{D}}_{n+1}$ to denote the resulting $n+1$ disjoint paths. Suppose that $d_{\mathrm{H}}(Y, Y')=k$ and $Q_1, Q_2, \ldots, Q_n$ are the n paths of Saad and Schultz's best (Y, Y')-container, where $1 \leq k \leq n-1$ and $|Q_1| \geq$

$|Q_2| \geq \ldots \geq |Q_n|$ is assumed. By Lemma 1 ($d_H(Y, Y')=f_2+f_4+f_5+f_6$), $F_2 \cup F_4 \cup F_5 \cup F_6$ contains the k bit positions where Y and Y' differ. Without loss of generality, assume $F_1 \cup F_3 \cup F_7 \cup F_8=\{1, 2, \ldots, n-k\}$ and let $Q_i = Y \rightarrow Y^{(i)} \Rightarrow^* Y'^{(i)} \rightarrow Y'$, where $1 \leq i \leq n-k$. We have $\{Y^{(i)}, Y'^{(i)}\} \cap \{Y, Y'\}$ empty.

We let $P_i^{\mathrm{D}} = P_{i,i}$ for all $1 \leq i \leq n-k$, and $P_j^{\mathrm{D}} = P_j^{\mathrm{M}}$ for all $n-k+1 \leq j \leq n+1$. We have $d_H(X, Y') \geq 2$, $d_H(X, Y) \geq 2$, $d_H(X', Y) \geq 2$, and $d_H(X', Y') \geq 2$, as a consequence of $f_2+f_3 \geq 2$ and $f_3+f_4 \geq 2$. Hence $\{Y^{(i)}, Y'^{(i)}\} \cap \{X, X'\}$ is empty (recall that $P_{i,i}$ requires $\{Y^{(i)}, Y'^{(i)}\} \cap \{X, X', Y, Y'\}$ empty). P_i^{D} has length $d_H(X, Y')+d_H(Y, X')+3$ if $i \in F_3$ and $d_H(X, Y')+d_H(Y, X')+5$ if $i \in F_7 \cup F_8$ (F_1 is empty). P_j^{D} has length at most $d_H(X, X')+d_H(Y, Y')+2$. These $n+1$ paths have lengths at most $\max\{d_H(X, X')+d_H(Y, Y')+2, d_H(X', Y)+d_H(X, Y')+3\}$ if $f_7+f_8=0$, and at most $\max\{d_H(X, X')+d_H(Y, Y')+2, d_H(X', Y)+d_H(X, Y')+5\}$ if $f_7+f_8 \neq 0$.

P_i^{D} and P_j^{D} are disjoint provided $\{Y^{(i)}, Y'^{(i)}\} \cap \{Y, Y'\}$ is empty and Q_j does not contain $Y^{(i)}$ and $Y'^{(i)}$. The former is true because $i \in F_1 \cup F_3 \cup F_7 \cup F_8$ can assure $Y \neq Y'^{(i)}$ and $Y' \neq Y^{(i)}$. The latter is true because $i \neq j$ and Q_i contains $Y^{(i)}$ and $Y'^{(i)}$.

3.6 Construction method (E)

The construction method (E) can be applied when $f_4 \geq 1$, $f_5+f_6+f_7+f_8=0$, $n \geq 4$, $d_H(Y, Y')<n$, and $\{X, X'\} \cap \{Y, Y'\}$ is empty. By $P_1^{\mathrm{E}}, P_2^{\mathrm{E}}, \ldots, P_{n+1}^{\mathrm{E}}$ we denote the resulting $n+1$ disjoint paths. Suppose that $d_H(Y, Y')=k$ and $Q_1, Q_2, \ldots, Q_n$ are the n paths of Saad and Schultz's best (Y, Y')-container ($f_4 \geq 1$ can assure $Y \neq Y'$), where $1 \leq k \leq n-1$ and $|Q_1| \geq |Q_2| \geq \ldots \geq |Q_n|$ is assumed. By Lemma 1, $F_2 \cup F_4 \cup F_5 \cup F_6$ contains the k bit positions where Y and Y' differ. Without loss of generality, assume $F_1 \cup F_3 \cup F_7 \cup F_8=\{1, 2, \ldots, n-k\}$. We let $Q_i = Y \rightarrow Y^{(i)} \Rightarrow^* Y'^{(i)} \rightarrow Y'$ for all $1 \leq i \leq n-k$. $P_1^{\mathrm{E}}, P_2^{\mathrm{E}}, \ldots, P_{n+1}^{\mathrm{E}}$ can be obtained, depending on whether $k=n-1$ or not.

Case 1. $k=n-1$. For all $2 \leq j \leq n$, let $P_j^{\mathrm{E}} = R_j$ whose length is at most $d_H(X, X')+d_H(Y, Y')+2$, where $W_j \notin \{X, X', Y, Y'\}$ can be determined for the following reason. Since $n \geq 4$, we have $d_H(Y, Y') \geq 3$. Now that $f_5+f_6+f_7+f_8=0$, we have $d_H(Y, Y')=f_2+f_4=d_H(X, X')$ by Lemma 1. Hence $d_H(X, X') \geq 3$.

We determine $M=\overline{Y'}$ ($f_5+f_6+f_7+f_8=0$ can assure $\overline{Y'} \in Q_{\min}$), and let $P_1^{\mathrm{E}} = P_1^{\mathrm{B}}$ and $P_{n+1}^{\mathrm{E}} = P_{n+1}^{\mathrm{B}}$. We have $|P_1^{\mathrm{E}}| \leq d_H(Y, M)+d_H(X, M)+d_H(\overline{M}, X')+d_H(\overline{M}, Y')+3$ ($1 \in F_1 \cup F_3 \cup F_7 \cup F_8=F_1 \cup F_3$), and $|P_{n+1}^{\mathrm{E}}| \leq d_H(X, M)+$

$d_{\mathrm{H}}(X', Y')+4=d_{\mathrm{H}}(Y, M)+d_{\mathrm{H}}(X, M)+d_{\mathrm{H}}(\overline{M}, X')+d_{\mathrm{H}}(\overline{M}, Y')+3$ ($Y=\overline{Y'^{(1)}}=M^{(1)}$ and $Y'=\overline{M}$). No change of P_s^{E} for some $s \in \{1, 2, \ldots, n\}-F_4$ is necessary because $\overline{M}=Y'\neq X'$.

P_{n+1}^{E} and P_1^{E} are disjoint because P_{n+1}^{B} and P_1^{B} are disjoint (refer to Section 3.4 where it was shown that P_{n+1}^{B} is disjoint with P_r^{B} for all $r \in \{1, 2, \ldots, n\}-F_4$). P_1^{E} and P_j^{E} are disjoint provided $\overline{M^{(1)}} \to Y'$ is disjoint with Q_j and $W_j \notin \{M^{(1)}, \overline{M^{(1)}}\}$. The former is true because $\overline{M^{(1)}}=Y'^{(1)}$ and $j\neq 1$. We have $W_j\neq M^{(1)}$ because $W_j\neq Y=M^{(1)}$, and $W_j\neq\overline{M^{(1)}}$ because $W_j \in Q_j$ and $\overline{M^{(1)}} \notin Q_j$. P_{n+1}^{E} and P_j^{E} are disjoint provided $Y \to M$ is disjoint with Q_j and $W_j \notin \{M, \overline{M}\}$. Since $M=\overline{Y'}$, the former holds as a consequence of Lemma 3 (let $A=Y$ and $B=Y'$). We have $W_j\neq M$ and $W_j\neq\overline{M}$, similarly.

Case 2. $k<n-1$. We determine $M=Y$ ($f_5+f_6+f_7+f_8=0$ assures $Y \in Q_{\min}$), and let $P_i^{\mathrm{E}}=P_i^{\mathrm{B}}$ for all $1\leq i\leq n-k$ and $P_j^{\mathrm{E}}=P_j^{\mathrm{M}}$ for all $n-k+1\leq j\leq n+1$. We have $|P_i^{\mathrm{E}}|\leq d_{\mathrm{H}}(X, M)+d_{\mathrm{H}}(Y, M)+d_{\mathrm{H}}(X', \overline{M})+d_{\mathrm{H}}(Y', \overline{M})+3$ and $|P_j^{\mathrm{E}}|\leq d_{\mathrm{H}}(X, X')+d_{\mathrm{H}}(Y, Y')+2$. P_i^{E}'s are disjoint because P_i^{B}'s are disjoint (refer to Section 3.4 where it was shown that P_r^{B}'s are disjoint for all $r \in \{1, 2, \ldots, n\}-F_4$). P_i^{E} and P_j^{E} are disjoint provided $\overline{M^{(i)}} \Rightarrow^* Y'$ is disjoint with Q_j and Q_j does not contain $M^{(i)}$ and $\overline{M^{(i)}}$. By Lemma 3 (let $A=Y'$ and $B=Y$), $\overline{Y} \Rightarrow^* Y'$ and Q_j are disjoint, which means that $\overline{M^{(i)}}$ ($=\overline{Y^{(i)}}$) $\Rightarrow^* Y'$ and Q_j are disjoint. Besides, we have $\overline{M^{(i)}}\neq Y'$ because $d_{\mathrm{H}}(\overline{M}, Y')=d_{\mathrm{H}}(\overline{Y}, Y')=n-k>1$. Hence $\overline{M^{(i)}} \notin Q_j$. Since $M^{(i)} \in Q_i$, $M^{(i)}=Y^{(i)}\neq Y'$, and $i\neq j$, we have $M^{(i)} \notin Q_j$.

3.7 Construction method (F)

The construction method (F) can be applied when $n=3$, $d_{\mathrm{H}}(X, X')=3$, $d_{\mathrm{H}}(Y, Y')=2$, and $\{X, X'\}\cap\{Y, Y'\}$ is empty. By P_1^{F}, P_2^{F}, P_3^{F}, and P_4^{F} we denote the resulting four disjoint paths. We have $d_{\mathrm{H}}(X, Y)$, $d_{\mathrm{H}}(X, Y')$, $d_{\mathrm{H}}(X', Y)$, and $d_{\mathrm{H}}(X', Y')$ all equal to 1 or 2. We assume $d_{\mathrm{H}}(X, Y)=1$. The discussion for $d_{\mathrm{H}}(X, Y)=2$ is very similar.

We have $d_{\mathrm{H}}(X, Y')=1$, $d_{\mathrm{H}}(X', Y)=2$, and $d_{\mathrm{H}}(X', Y')=2$, because $d_{\mathrm{H}}(X, Y)+d_{\mathrm{H}}(X, Y') \in \{2, 4\}$, $d_{\mathrm{H}}(X, Y)+d_{\mathrm{H}}(X', Y)\geq d_{\mathrm{H}}(X, X')=3$, and $d_{\mathrm{H}}(X, Y')+d_{\mathrm{H}}(X', Y')\geq d_{\mathrm{H}}(X, X')=3$, respectively. Also we have $d_{\mathrm{H}}(X', \overline{Y'})=3-d_{\mathrm{H}}(X', Y')=1$, $d_{\mathrm{H}}(X', \overline{Y})=3-d_{\mathrm{H}}(X', Y)=1$, and $d_{\mathrm{H}}(Y, \overline{Y'})=d_{\mathrm{H}}(\overline{Y}, Y')=3-d_{\mathrm{H}}(Y, Y')=1$. Hence there are two paths $Y \to X \to Y'$ and $Y\to \overline{Y'} \to X' \to \overline{Y} \to Y'$ from Y to Y' in a 3-cube. Suppose that $Y \to T \to Y'$ is the

other shortest path from Y to Y', where $T \neq X$. The three paths from Y to Y' are disjoint, because $X \notin \{\overline{Y'}, \overline{Y}\}$, $T \notin \{\overline{Y'}, \overline{Y}\}$, and $T \neq X'$ (a consequence of $d_H(Y', T)=1$ and $d_H(Y', X')=2$).

Let $P_1^F = (X, Y) \to (X, X) \to (\overline{X}, \overline{X})$ $(=(X', X')) \to (X', \overline{Y}) \to (X', Y')$, $P_2^F = (X, Y) \to (X, \overline{Y'}) \to (X, X') \to (X', X) \to (X', Y')$, $P_3^F = (X, Y) \to (X, T) \to (X, Y') \to (Y', X) \Rightarrow^* (Y', X') \to (X', Y')$, and $P_4^F = (X, Y) \to (Y, X) \Rightarrow^* (Y, X') \to (X', Y) \to (X', T) \to (X', Y')$, which were obtained according to the three paths from Y to Y' above. They have lengths 4, 4, 7, and 7, respectively.

3.8 An (I, I')-container

At most seven (I, I')-containers can be obtained by the main construction method and six auxiliary construction methods. The (I, I')-container we desire is determined as the one with minimal length. For example, when I=(0000, 1100) and I'=(1111, 0011), all auxiliary construction methods but (F) can be applied. The containers obtained by the main construction method and auxiliary construction methods (A), (B), (C), (D), and (E) have lengths 10, 9, 11, 7, 10, and 10, respectively. Hence the container obtained by (C) is desired. The following are the five disjoint paths it contains.

$P_1^C = (0000, 1100) \to (0000, 0100) \to (0100, 0000) \to (0100, 0100) \to (1011, 1011) \to (1011, 1111) \to (1111, 1011) \to (1111, 0011)$.

$P_2^C = (0000, 1100) \to (0000, 1000) \to (1000, 0000) \to (1000, 1000) \to (0111, 0111) \to (0111, 1111) \to (1111, 0111) \to (1111, 0011)$.

$P_3^C = (0000, 1100) \to (0000, 1110) \to (1110, 0000) \to (1110, 0001) \to (0001, 1110) \to (0001, 1111) \to (1111, 0001) \to (1111, 0011)$.

$P_4^C = (0000, 1100) \to (0000, 1101) \to (1101, 0000) \to (1101, 0010) \to (0010, 1101) \to (0010, 1111) \to (1111, 0010) \to (1111, 0011)$.

$P_5^C = (0000, 1100) \to (1100, 0000) \to (1100, 0001) \to (1100, 0011) \to (0011, 1100) \to (0011, 1110) \to (0011, 1111) \to (1111, 0011)$.

4 An upper bound on the lengths of the best containers

In this section, the length of the (I, I')-container that was obtained in Section 3 was analyzed. We use $L^{\mathrm{M}}(I, I')$, $L^{\mathrm{A}}(I, I')$, $L^{\mathrm{B}}(I, I')$, $L^{\mathrm{C}}(I, I')$, $L^{\mathrm{D}}(I, I')$, $L^{\mathrm{E}}(I, I')$, and $L^{\mathrm{F}}(I, I')$ to represent the worst-case lengths of the (I, I')-containers that were obtained by the main construction method and auxiliary construction methods (A), (B), (C), (D), (E), and (F), respectively. We have

$L^{\mathrm{M}}(I, I') =$ $\max\{n+5, d_{\mathrm{H}}(X, X')+d_{\mathrm{H}}(Y, Y')+4, \min\{d_{\mathrm{H}}(X, X')+d_{\mathrm{H}}(Y, Y')+8, d_{\mathrm{H}}(\overline{X}, Y')+d_{\mathrm{H}}(\overline{Y}, X')+3\}\}$ if $(X=Y$ and $X'\neq Y')$ or $(X\neq Y$ and $X'=Y')$, $d_{\mathrm{H}}(X, X')+d_{\mathrm{H}}(Y, Y')+2$ if $d_{\mathrm{H}}(Y, Y')=n$ and $\{X, X'\}\cap\{Y, Y'\}$ is empty, and $\max\{8, d_{\mathrm{H}}(X, X')+d_{\mathrm{H}}(Y, Y')+4\}$ else.

$L^{\mathrm{A}}(I, I') =$ $d_{\mathrm{H}}(X, Y')+d_{\mathrm{H}}(X', Y)+7$.

$L^{\mathrm{B}}(I, I') =$ $d_{\mathrm{H}}(Y, M)+d_{\mathrm{H}}(X, M)+d_{\mathrm{H}}(\overline{M}, X')+d_{\mathrm{H}}(\overline{M}, Y')+7$, where $M\in Q_{\min}$.

$L^{\mathrm{C}}(I, I') =$ $\max\{d_{\mathrm{H}}(Y, M)+d_{\mathrm{H}}(X, M)+d_{\mathrm{H}}(\overline{M}, X')+d_{\mathrm{H}}(\overline{M}, Y')+3, d_{\mathrm{H}}(X, Y')+d_{\mathrm{H}}(X', Y)+3\}$ if $f_5+f_6+f_7+f_8=0$, and $\max\{d_{\mathrm{H}}(Y, M)+d_{\mathrm{H}}(X, M)+d_{\mathrm{H}}(\overline{M}, X')+d_{\mathrm{H}}(\overline{M}, Y')+5, d_{\mathrm{H}}(X, Y')+d_{\mathrm{H}}(X', Y)+3\}$ if $f_5+f_6+f_7+f_8\neq 0$, where $M\in Q_{\min}$.

$L^{\mathrm{D}}(I, I') =$ $\max\{d_{\mathrm{H}}(X, X')+d_{\mathrm{H}}(Y, Y')+2, d_{\mathrm{H}}(X, Y')+d_{\mathrm{H}}(X', Y)+3\}$ if $f_5+f_6+f_7+f_8=0$, and $\max\{d_{\mathrm{H}}(X, X')+d_{\mathrm{H}}(Y, Y')+2, d_{\mathrm{H}}(X, Y')+d_{\mathrm{H}}(X', Y)+5\}$ if $f_5+f_6+f_7+f_8\neq 0$.

$L^{\mathrm{E}}(I, I') =$ $\max\{d_{\mathrm{H}}(Y, M)+d_{\mathrm{H}}(X, M)+d_{\mathrm{H}}(\overline{M}, X')+d_{\mathrm{H}}(\overline{M}, Y')+3, d_{\mathrm{H}}(X, X')+d_{\mathrm{H}}(Y, Y')+2\}$, where $M\in Q_{\min}$.

$L^{\mathrm{F}}(I, I') =$ 7.

By Lemma 1, we have

$L^{\mathrm{M}}(I, I') =$ $\max\{n+5, 2f_2+2f_4+f_5+f_6+f_7+f_8+4, \min\{2f_2+2f_4+f_5+f_6+f_7+f_8+8, 2f_1+2f_2+f_5+f_6+f_7+f_8+3\}\}$ if $(X=Y$ and $X'\neq Y')$ or $(X\neq Y$ and $X'=Y')$,
$2f_2+2f_4+f_5+f_6+f_7+f_8+2$ if $d_{\mathrm{H}}(Y, Y')=n$ and $\{X, X'\}\cap\{Y, Y'\}$ is empty, and
$\max\{8, 2f_2+2f_4+f_5+f_6+f_7+f_8+4\}$ else.

$L^{\mathrm{A}}(I, I') =$ $2f_3+2f_4+f_5+f_6+f_7+f_8+7$.

$L^{\mathrm{B}}(I, I') =$ $2f_1+2f_2+2f_3+f_5+f_6+f_7+f_8+7$.

$L^{\mathrm{C}}(I, I') =$ $\max\{2f_1+2f_2+2f_3+3, 2f_3+2f_4+3\}$ if $f_5+f_6+f_7+f_8=0$, and
$\max\{2f_1+2f_2+2f_3+f_5+f_6+f_7+f_8+5, 2f_3+2f_4+f_5+f_6+f_7+f_8+3\}$ if $f_5+f_6+f_7+f_8\neq 0$.

$L^{\mathrm{D}}(I, I') =$ $\max\{2f_2+2f_4+2, 2f_3+2f_4+3\}$ if $f_5+f_6+f_7+f_8=0$, and
$\max\{2f_2+2f_4+f_5+f_6+f_7+f_8+2, 2f_3+2f_4+f_5+f_6+f_7+f_8+5\}$ if $f_5+f_6+f_7+f_8\neq 0$.

$L^{E}(I, I') = \max\{2f_1+2f_2+2f_3+3,\ 2f_2+2f_4+2\}$.

$L^{F}(I, I') = 7$.

The following two lemmas together show that the (I, I')-container of Section 3 has length not greater than $n+\lfloor n/3\rfloor+4$.

Lemma 5. When $\{X, X'\}\cap\{Y, Y'\}$ is not empty, the (I, I')-container of Section 3 has length at most $n+5$.

Proof. Four cases are discussed below.

Case 1. $X\neq Y$ and $X'\neq Y'$. We have $X=Y'$ or $X'=Y$. We assume $X=Y'$, which implies $f_3=f_4=f_6=f_8=0$ by Lemma 1. Hence $f_1+f_2+f_5+f_7=n$. If $f_2\geq 2$, then there is an (I, I')-container obtained from the construction method (A) whose length is at most $2f_3+2f_4+f_5+f_6+f_7+f_8+7=f_5+f_7+7=(n-f_1-f_2)+7\leq n+5$. If $f_2\leq 1$, then there is an (I, I')-container obtained from the main construction method whose length is at most $\max\{8,\ 2f_2+2f_4+f_5+f_6+f_7+f_8+4\}\leq n+5$. The discussion for $X'=Y$ is similar.

Case 2. $X=Y$ and $X'\neq Y'$. By Lemma 1 we have $f_2=f_3=f_5=f_8=0$. Hence $f_1+f_4+f_6+f_7=n$. If $f_1\geq f_4-1$, then there is an (I, I')-container obtained from the main construction method whose length is at most $\max\{n+5,\ 2f_2+2f_4+f_5+f_6+f_7+f_8+4,\ \min\{2f_2+2f_4+f_5+f_6+f_7+f_8+8,\ 2f_1+2f_2+f_5+f_6+f_7+f_8+3\}\}=\max\{n+5,\ 2f_4+f_6+f_7+4,\ \min\{2f_4+f_6+f_7+8,\ 2f_1+f_6+f_7+3\}\}\leq n+5$, because $\min\{2f_4+f_6+f_7+8,\ 2f_1+f_6+f_7+3\}=2f_4+f_6+f_7+8$ if $f_1\geq f_4+3$, and $2f_1+f_6+f_7+3$ if $f_4-1\leq f_1\leq f_4+2$. On the other hand, if $f_1\leq f_4-2$, then $f_4\geq 2$ and there is an (I, I')-container obtained from the construction method (B) whose length is at most $2f_1+2f_2+2f_3+f_5+f_6+f_7+f_8+7\leq n+5$.

Case 3. $X\neq Y$ and $X'=Y'$. Similar to Case 2.

Case 4. $X=Y$ and $X'=Y'$. By Lemma 1 we have $f_2=f_3=f_5=f_6=f_7=f_8=0$. Hence $f_1+f_4=n$. If $f_1\geq f_4-1$, then there is an (I, I')-container obtained from the main construction method whose length is at most $\max\{8,\ 2f_2+2f_4+f_5+f_6+f_7+f_8+4\}\leq n+5$. If $f_1\leq f_4-2$, then there is an (I, I')-container obtained from the construction method (B) whose length is at most $2f_1+2f_2+2f_3+f_5+f_6+f_7+f_8+7\leq n+5$. □

Lemma 6. When $\{X, X'\}\cap\{Y, Y'\}$ is empty, the (I, I')-container of Section 3 has length at most $n+\lfloor n/3\rfloor+4$.

Proof. There are four cases discussed below.

Case 1. $f_1=0$ and $f_5+f_6+f_7+f_8=0$. We have $f_2+f_3+f_4=n$. Three cases are discussed below.

Case 1.1. $f_3\geq f_4$. Three cases are further discussed below.

Case 1.1.1. $f_3 \geq f_2$. We have $3f_3 \geq f_2+f_3+f_4=n$, which implies $f_3 \geq \lceil n/3 \rceil$. By Lemma 1, $d_H(Y, Y')=f_2+f_4=n-f_3 \leq \lfloor 2n/3 \rfloor < n$. There is an (I, I')-container obtained from the main construction method whose length is at most $\max\{8, 2f_2+2f_4+f_5+f_6+f_7+f_8+4\} \leq n+\lfloor n/3 \rfloor+4$.

Case 1.1.2. $f_3=f_2-1$ or f_2-2. We have $f_3 \geq \lceil (n-2)/3 \rceil \geq 1$, similarly. Also, $f_2 \geq \lceil (n+2)/3 \rceil \geq 1$ because $f_2 \geq f_3+1 \geq f_4+1$. We have $1 \leq f_2 \leq d_H(Y, Y')=n-f_3<n$. When $f_3+f_4 \geq 2$, there is an (I, I')-container obtained from the construction method (D) whose length is at most $\max\{2f_2+2f_4+2, 2f_3+2f_4+3\}<n+\lfloor n/3 \rfloor+4$.

When $f_3+f_4<2$, we have $f_3=1$ and $f_4=0$, which implies $f_2=n-1$. If $n \geq 4$, then $f_2 \geq 3$ and there is an (I, I')-container obtained from the construction method (A) whose length is at most $2f_3+2f_4+f_5+f_6+f_7+f_8+7 \leq n+\lfloor n/3 \rfloor+4$. If $n=3$, then $d_H(Y, Y')=n-f_3=2$. There is an (I, I')-container obtained from the main construction method whose length is at most $\max\{8, 2f_2+2f_4+f_5+f_6+f_7+f_8+4\}=8=n+\lfloor n/3 \rfloor+4$.

Case 1.1.3. $f_3 \leq f_2-3$. We have $f_2 \geq \lceil n/3 \rceil+2 \geq 3$ because $f_2 \geq f_3+3 \geq f_4+3$. There is an (I, I')-container obtained from the construction method (A) whose length is at most $2f_3+2f_4+f_5+f_6+f_7+f_8+7<n+\lfloor n/3 \rfloor+4$.

Case 1.2. $f_3=f_4-1$ or f_4-2. Three cases are discussed below.

Case 1.2.1. $f_4 \geq f_2+2$. We have $f_3 \geq \lceil (n-2)/3 \rceil \geq 1$ and $f_4 \geq \lceil n/3 \rceil+1 \geq 2$, similarly. Then $d_H(Y, Y')=n-f_3<n$. If $n \geq 4$, then there is an (I, I')-container obtained from the construction method (E) whose length is at most $\max\{2f_1+2f_2+2f_3+3, 2f_2+2f_4+2\} \leq n+\lfloor n/3 \rfloor+4$. If $n=3$, then $f_4=2$ and $f_3=1$. There is an (I, I')-container obtained from the main construction method whose length is at most $\max\{8, 2f_2+2f_4+f_5+f_6+f_7+f_8+4\}=8=n+\lfloor n/3 \rfloor+4$.

Case 1.2.2. $f_2-1 \leq f_4 \leq f_2+1$. We have $f_2 \geq \lceil (n-1)/3 \rceil \geq 1$, $f_3 \leq \lfloor (n-1)/3 \rfloor$, and $f_4 \geq \lceil n/3 \rceil \geq 1$, similarly. If $n \geq 4$, then $f_4 \geq 2$. There is an (I, I')-container obtained from the construction method (C) whose length is at most $\max\{2f_1+2f_2+2f_3+3, 2f_3+2f_4+3\} \leq n+\lfloor n/3 \rfloor+4$. If $n=3$, then $f_3=0$ and $d_H(Y, Y')=n-f_3=n$. There is an (I, I')-container obtained from the main construction method whose length is at most $2f_2+2f_4+f_5+f_6+f_7+f_8+2=8=n+\lfloor n/3 \rfloor+4$.

Case 1.2.3. $f_4 \leq f_2-2$. We have $f_2 \geq \lceil (n-1)/3 \rceil+2$. There is an (I, I')-container obtained from the construction method (A) whose length is at most $2f_3+2f_4+f_5+f_6+f_7+f_8+7 \leq n+\lfloor n/3 \rfloor+4$.

Case 1.3. $f_3 \leq f_4-3$. Three cases are discussed below.

Case 1.3.1. $f_4 \geq f_2+2$. We have $f_4 \geq \lceil (n-1)/3 \rceil+2$. There is an (I, I')-container obtained from the construction method (B) whose length is at most $2f_1+2f_2+2f_3+f_5+f_6+f_7+f_8+7 \leq n+\lfloor n/3 \rfloor+4$.

Case 1.3.2. $f_2-1 \leq f_4 \leq f_2+1$. We have $f_2 \geq \lceil (n+1)/3 \rceil \geq 2$ and $f_4 \geq \lceil (n+2)/3 \rceil \geq 2$. There is an (I, I')-container obtained from the construction method (C) whose length is at most $\max\{2f_1+2f_2+2f_3+3,\ 2f_3+2f_4+3\} < n+\lfloor n/3 \rfloor+4$.

Case 1.3.3. $f_4 \leq f_2-2$. We have $f_2 \geq \lceil (n+1)/3 \rceil+2 \geq 3$. There is an (I, I')-container obtained from the construction method (A) whose length is at most $2f_3+2f_4+f_5+f_6+f_7+f_8+7 < n+\lfloor n/3 \rfloor+4$.

Case 2. $f_1=0$ and $f_5+f_6+f_7+f_8>0$. Suppose $f_5+f_6+f_7+f_8=k \geq 1$. We have $f_2+f_3+f_4=n-k$. Two cases are discussed below.

Case 2.1. $f_3 \geq f_4-1$. Four cases are further discussed below.

Case 2.1.1. $f_2 \geq f_3+3$. We have $f_2 \geq \lceil (n-k+2)/3 \rceil+1$. There is an (I, I')-container obtained from the construction method (A) whose length is at most $2f_3+2f_4+f_5+f_6+f_7+f_8+7=2(n-k-f_2)+k+7 \leq n+\lfloor n/3 \rfloor+4$.

Case 2.1.2. $f_2=f_3+1$ or f_3+2. We have $f_2 \geq \lceil (n-k+1)/3 \rceil$ and $f_3 \geq \lceil (n-k)/3 \rceil-1$. When $f_2+f_4=1$ or ($f_2+f_4=2$ and $n \geq 4$), there is an (I, I')-container obtained from the main construction method whose length is at most $\max\{8,\ 2f_2+2f_4+f_5+f_6+f_7+f_8+4\} \leq n+\lfloor n/3 \rfloor+4$.

When $f_2+f_4=2$ and $n=3$, we have $d_H(Y, Y') \geq 2$ by Lemma 1. If $d_H(Y, Y')=2$, then $f_5+f_6=0$, $f_7+f_8=k=1$, and $d_H(X, X')=f_2+f_4+f_7+f_8=3$. There is an (I, I')-container obtained from the construction method (F) whose length is $7<n+\lfloor n/3 \rfloor+4$. If $d_H(Y, Y')=3$, then there is an (I, I')-container obtained from the main construction method whose length is $2f_2+2f_4+f_5+f_6+f_7+f_8+2=7<n+\lfloor n/3 \rfloor+4$.

When $f_2+f_4 \geq 3$, we have $n \geq 4$ and $d_H(Y, Y') \geq 3$. Since $f_2 \geq f_4$, we have $f_2 \geq 2$. If $d_H(Y, Y')<n$ and $f_3+f_4 \geq 2$, then there is an (I, I')-container obtained from the construction method (D) whose length is at most $\max\{2f_2+2f_4+f_5+f_6+f_7+f_8+2,\ 2f_3+2f_4+f_5+f_6+f_7+f_8+5\} \leq n+\lfloor n/3 \rfloor+4$. If $d_H(Y, Y')<n$ and $f_3+f_4 \leq 1$, then there is an (I, I')-container obtained from the construction method (A) whose length is at most $2f_3+2f_4+f_5+f_6+f_7+f_8+7 \leq n+\lfloor n/3 \rfloor+4$. If $d_H(Y, Y')=n$, then there is an (I, I')-container obtained from the main construction method whose length is at most $2f_2+2f_4+f_5+f_6+f_7+f_8+2 \leq n+\lfloor n/3 \rfloor+4$.

Case 2.1.3. $f_2=f_3$ and $f_3=f_4-1$. We have $n-k \geq 1$, $f_2=(n-k-1)/3$, and $f_4=(n-k-1)/3+1$. When $k=n-1$, we have $f_2=0$ and $f_4=1$. There is an (I, I')-container obtained from the main construction method whose length is at most $\max\{8,\ 2f_2+2f_4+f_5+f_6+f_7+f_8+4\} \leq n+\lfloor n/3 \rfloor+4$. When $k \leq n-2$, we have $f_2 \geq 1$ and $f_4 \geq 2$. There is an $(I,$

I')-container obtained from the construction method (C) whose length is at most $\max\{2f_1+2f_2+2f_3+f_5+f_6+f_7+f_8+5,\ 2f_3+2f_4+f_5+f_6+f_7+f_8+3\}\le n+\lfloor n/3\rfloor+4$.

Case 2.1.4. ($f_2=f_3$ and $f_3>f_4-1$) or $f_2<f_3$. We have $n-k=f_2+f_3+f_4<f_3+f_3+(f_3+1)=3f_3+1$. Hence, $f_3\ge\lceil(n-k)/3\rceil$. There is an ($I$, I')-container obtained from the main construction method whose length is at most $\max\{8,\ 2f_2+2f_4+f_5+f_6+f_7+f_8+4\}\le n+\lfloor n/3\rfloor+4$.

Case 2.2. $f_3\le f_4-2$ (hence $f_4\ge 2$). Three cases are discussed below.

Case 2.2.1. $f_4\ge f_2+2$. We have $f_4\ge\lceil(n-k+1)/3\rceil+1$. There is an ($I$, I')-container obtained from the construction method (B) whose length is at most $2f_1+2f_2+f_3+f_5+f_6+f_7+f_8+7\le n+\lfloor n/3\rfloor+4$.

Case 2.2.2. $f_4=f_2$ or f_2+1 (hence $f_2\ge 1$). We have $f_4\ge\lceil(n-k+2)/3\rceil$. There is an ($I$, I')-container obtained from the construction method (C) whose length is at most $\max\{2f_1+2f_2+2f_3+f_5+f_6+f_7+f_8+5,\ 2f_3+f_4+f_5+f_6+f_7+f_8+3\}\le n+\lfloor n/3\rfloor+4$.

Case 2.2.3. $f_4\le f_2-1$ (hence $f_2\ge 3$). We have $f_2\ge\lceil(n-k+1)/3\rceil+1$. There is an ($I$, I')-container obtained from the construction method (A) whose length is at most $2f_3+2f_4+f_5+f_6+f_7+f_8+7\le n+\lfloor n/3\rfloor+4$.

Case 3. $f_1>0$ and $f_5+f_6+f_7+f_8=0$. We have $d_{\mathrm{H}}(Y, Y')<n$ and $f_1+f_2+f_3+f_4=n$. Three cases are discussed below.

Case 3.1. $f_3\ge f_4-f_1+1$. Two cases are further discussed below.

Case 3.1.1. $f_2\le f_3+1$. We have $f_3\ge\lceil(n-2f_1)/3\rceil$. There is an ($I$, I')-container obtained from the main construction method whose length is at most $\max\{8,\ 2f_2+2f_4+f_5+f_6+f_7+f_8+4\}=\max\{8,\ 2(n-f_1-f_3)+4\}\le n+\lfloor n/3\rfloor+4$.

Case 3.1.2. $f_2\ge f_3+2$. We have $f_2\ge\lceil(n-2f_1+2)/3\rceil+1$. There is an ($I$, I')-container obtained from the construction method (A) whose length is at most $2f_3+2f_4+f_5+f_6+f_7+f_8+7<n+\lfloor n/3\rfloor+4$.

Case 3.2. $f_4-f_1-2\le f_3\le f_4-f_1$. Three cases are discussed below.

Case 3.2.1. $f_4\ge f_1+f_2+1$. We have $f_3\ge\lceil(n-2f_1)/3\rceil-1$ and $f_4\ge\lceil(n+f_1+1)/3\rceil$. If $n\ge 4$, then there is an (I, I')-container obtained from the construction method (E) whose length is at most $\max\{2f_1+2f_2+2f_3+3,\ 2f_2+2f_4+2\}=\max\{2(n-f_4)+3,\ 2(n-f_3-f_1)+2\}\le n+\lfloor n/3\rfloor+4$. If $n=3$, then $f_1=1$, $f_2=f_3=0$, and $f_4=2$. There is an (I, I')-container obtained from the main construction method whose length is $\max\{8,\ 2f_2+2f_4+f_5+f_6+f_7+f_8+4\}=8=n+\lfloor n/3\rfloor+4$.

Case 3.2.2. $f_4=f_1+f_2-1$ or f_1+f_2 (hence $f_4\geq f_2$ because $f_1\geq 1$). We have $f_2\geq\lceil(n-2f_1)/3\rceil$ and $f_4\geq\lceil(n+f_1-1)/3\rceil$. If $f_2=0$, then $f_1\geq f_4$ which implies $f_4\leq\lfloor n/2\rfloor$. There is an (I, I')-container obtained from the main construction method whose length is $\max\{8, 2f_2+2f_4+f_5+f_6+f_7+f_8+4\}\leq n+\lfloor n/3\rfloor+4$. If $f_2=1$ and $f_4=1$, then there is an (I, I')-container obtained from the main construction method whose length is at most $\max\{8, 2f_2+2f_4+f_5+f_6+f_7+f_8+4\}=8\leq n+\lfloor n/3\rfloor+4$. If ($f_2=1$ and $f_4>1$) or $f_2>1$, then there is an (I, I')-container obtained from the construction method (C) whose length is at most $\max\{2f_3+2f_4+3, 2f_1+2f_2+2f_3+3\}=\max\{2(n-f_1-f_2)+3, 2(n-f_4)+3\}<n+\lfloor n/3\rfloor+4$.

Case 3.2.3. $f_4\leq f_1+f_2-2$. We have $f_2\geq\lceil(n-2f_1+1)/3\rceil+1$. Since $f_4\geq f_1+f_3$, we have $f_2\geq f_3+2$. There is an (I, I')-container obtained from the construction method (A) whose length is at most $2f_3+2f_4+f_5+f_6+f_7+f_8+7\leq n+\lfloor n/3\rfloor+4$.

Case 3.3. $f_3\leq f_4-f_1-3$ (hence $f_4\geq 4$). Three cases are discussed below.

Case 3.3.1. $f_4\geq f_2+f_1+2$. We have $f_4\geq\lceil(n+f_1+2)/3\rceil+1$. There is an (I, I')-container obtained from the construction method (B) whose length is at most $2f_1+2f_2+2f_3+f_5+f_6+f_7+f_8+7<n+\lfloor n/3\rfloor+4$.

Case 3.3.2. $f_2+f_1-1\leq f_4\leq f_2+f_1+1$. We have $f_2\geq\lceil(n+1-2f_1)/3\rceil$ and $f_4\geq\lceil(n+f_1+2)/3\rceil$. We have $f_2\geq f_4-f_1-1\geq(f_3+3)-1=f_3+2$. There is an (I, I')-container obtained from the construction method (C) whose length is at most $\max\{2f_3+2f_4+f_5+f_6+f_7+f_8+3, 2f_1+2f_2+2f_3+f_5+f_6+f_7+f_8+3\}<n+\lfloor n/3\rfloor+4$.

Case 3.3.3. $f_4\leq f_2+f_1-2$. We have $f_2\geq f_4-f_1+2\geq(f_3+3)+2=f_3+5$. There is an (I, I')-container obtained from the construction method (A) whose length is at most $2f_3+2f_4+f_5+f_6+f_7+f_8+7<n+\lfloor n/3\rfloor+4$.

Case 4. $f_1>0$ and $f_5+f_6+f_7+f_8>0$. Suppose $f_5+f_6+f_7+f_8=k\geq 1$. We have $f_1+f_2+f_3+f_4=n-k$. Two cases are discussed below.

Case 4.1. $f_3\geq f_4-f_1-1$. Three cases are further discussed below

Case 4.1.1. $f_2\geq f_3+2$. We have $f_2\geq\lceil(n-2f_1-k)/3\rceil+1$. There is an (I, I')-container obtained from the construction method (A) whose length is at most $2f_3+2f_4+f_5+f_6+f_7+f_8+7\leq n+\lfloor n/3\rfloor+4$.

Case 4.1.2. $f_2=f_3+1$ and $f_3=f_4-f_1-1$. We have $f_2=(n-2f_1-k+1)/3$ and $f_4=(n+f_1-k+1)/3$. There is an (I, I')-container obtained from the construction method (C) whose length is at most $\max\{2f_1+2f_2+2f_3+f_5+f_6+f_7+f_8+5, 2f_3+2f_4+f_5+f_6+f_7+f_8+3\}\leq n+\lfloor n/3\rfloor+4$.

Case 4.1.3. ($f_2=f_3+1$ and $f_3>f_4-f_1-1$) or $f_2<f_3+1$. We have $n-k=f_1+f_2+f_3+f_4<f_1+(f_3+1)+f_3+(f_3+f_1+1)=2f_1+3f_3+2$. Hence we have $f_3\geq\lceil(n-2f_1-k-1)/3\rceil$. There is an (I, I')-container obtained from the main construction method whose length is at most $\max\{8, 2f_2+2f_4+f_5+f_6+f_7+f_8+4\}\leq n+\lfloor n/3\rfloor+4$.

Case 4.2. $f_3\leq f_4-f_1-2$ (hence $f_4\geq 3$). Three cases are discussed below.

Case 4.2.1. $f_4\geq f_2+f_1+2$. We have $f_4\geq\lceil(n+f_1-k+1)/3\rceil+1$. There is an (I, I')-container obtained from the construction method (B) whose length is at most $2f_1+2f_2+2f_3+f_5+f_6+f_7+f_8+7\leq n+\lfloor n/3\rfloor+4$.

Case 4.2.2. $f_2+f_1\leq f_4\leq f_2+f_1+1$ (hence $f_2\geq f_4-f_1-1\geq f_3+1$). We have $f_2\geq\lceil(n-2f_1-k)/3\rceil$ and $f_4\geq\lceil(n+f_1-k+2)/3\rceil$. There is an (I, I')-container obtained from the construction method (C) whose length is at most $\max\{2f_3+2f_4+f_5+f_6+f_7+f_8+3, 2f_1+2f_2+2f_3+f_5+f_6+f_7+f_8+5\}<n+\lfloor n/3\rfloor+4$.

Case 4.2.3. $f_4\leq f_2+f_1-1$ (hence $f_2\geq f_4-f_1+1\geq f_3+3$). We have $f_2\geq\lceil(n-2f_1-k+1)/3\rceil+1$. There is an (I, I')-container obtained from the construction method (A) whose length is at most $2f_3+2f_4+f_5+f_6+f_7+f_8+7\leq n+\lfloor n/3\rfloor+4$. □

It was shown in [3] that when $X=X'$, there is an (I, I')-container whose length is at most $n+5$. According to Lemma 5 and Lemma 6, we have the following lemma.

Lemma 7. Suppose that $I=(X, Y)$ and $I'=(X', Y')$ are two distinct nodes of the HCN(n), where $n\geq 3$. A best (I, I')-container of width $n+1$ has length not greater than $n+\lfloor n/3\rfloor+4$.

5 A lower bound on the fault diameter and the main result

In this section we show that the n-fault diameter of the HCN(n) is $n+\lfloor n/3\rfloor+3$ at most. For this purpose we need to estimate the minimal length of a path when it contains nondiameter links and/or diameter links. The following two lemmas serve the purpose.

Lemma 8. Suppose that $I=(X, Y)$ and $I'=(X', Y')$ are two distinct nodes of the HCN(n) and P is a path from I to I' that contains $c>0$ nondiameter links (without diameter links), where $X\neq X'$. Then, $|P|\geq d_H(Y, Y')+d_H(X, X')+c$ if c is even, and $|P|\geq d_H(Y, X')+d_H(X, Y')+c$ if c is odd.

Proof. If c is odd, then P can be expressed as $(X, Y)\Rightarrow^*(X, Z_1)\rightarrow(Z_1, X)\Rightarrow^*(Z_1, Z_2)\rightarrow(Z_2, Z_1)\Rightarrow^*(Z_2, Z_3)\rightarrow(Z_3, Z_2)\Rightarrow^*\ldots\Rightarrow^*(Z_{c-2}, Z_{c-1})\rightarrow(Z_{c-1}, Z_{c-2})\Rightarrow^*(Z_{c-1}, X')\rightarrow(X', Z_{c-1})\Rightarrow^*(X', Y')$. We have

$$
\begin{aligned}
|P| &= d_{\mathrm{H}}(Y, Z_1)+1+d_{\mathrm{H}}(X, Z_2)+1+\sum_{i=1}^{c-3}\{d_{\mathrm{H}}(Z_i, Z_{i+2})+1\}+d_{\mathrm{H}}(Z_{c-2}, X')+1+d_{\mathrm{H}}(Z_{c-1}, Y') \\
&= (d_{\mathrm{H}}(Y, Z_1)+\sum_{i\in\{1,3,5,\ldots,c-4\}} d_{\mathrm{H}}(Z_i, Z_{i+2})+d_{\mathrm{H}}(Z_{c-2}, X'))+(d_{\mathrm{H}}(X, Z_2)+\sum_{i\in\{2,4,6,\ldots,c-3\}} d_{\mathrm{H}}(Z_i, Z_{i+2})+d_{\mathrm{H}}(Z_{c-1}, Y'))+c \\
&\geq d_{\mathrm{H}}(Y, X')+d_{\mathrm{H}}(X, Y')+c.
\end{aligned}
$$

The discussion is similar for even c. □

Lemma 9. Suppose that $I=(X, Y)$ and $I'=(X', Y')$ are two distinct nodes of the HCN(n) and P is a path from I to I' that contains $d>0$ diameter links, where $X\neq X'$. Then, $|P|\geq d_{\mathrm{H}}(Y, Y')+d_{\mathrm{H}}(X, X')+2d-1$ if d is even, and $|P|\geq d_{\mathrm{H}}(Y, M)+d_{\mathrm{H}}(X, M)+d_{\mathrm{H}}(\overline{M}, X')+d_{\mathrm{H}}(\overline{M}, Y')+2d+\Delta$ if d is odd, where $M\in Q_{\min}$ and Δ can be determined as follows:

(1) $\Delta=1$ if P contains neither of the two links $(X, X)\rightarrow(\overline{X}, \overline{X})$ and $(X', X')\rightarrow(\overline{X'}, \overline{X'})$;

(2) $\Delta\in\{0, 1\}$ if P contains $(X, X)\rightarrow(\overline{X}, \overline{X})$ or $(X', X')\rightarrow(\overline{X'}, \overline{X'})$ but not both;

(3) $\Delta\in\{-1, 0, 1\}$ else.

Proof. Since a lower bound on the length of P is concerned, P can be expressed as $(X, Y)\Rightarrow^*(X, T_1)\rightarrow(T_1, X)\Rightarrow^*(T_1, T_1)\rightarrow(\overline{T_1}, \overline{T_1})\Rightarrow^*(\overline{T_1}, T_2)\rightarrow(T_2, \overline{T_1})\Rightarrow^*(T_2, T_2)\rightarrow(\overline{T_2}, \overline{T_2})\Rightarrow^*\ldots\Rightarrow^*(T_d, T_d)\rightarrow(\overline{T_d}, \overline{T_d})\Rightarrow^*(\overline{T_d}, X')\rightarrow(X', \overline{T_d})\Rightarrow^*(X', Y')$, where $(X, T_1)\rightarrow(T_1, X)\Rightarrow^*(T_1, T_1)$ and $(\overline{T_d}, \overline{T_d})\Rightarrow^*(\overline{T_d}, X')\rightarrow(X', \overline{T_d})$ degenerate to (X, X) and (X', X') if $T_1=X$ and $\overline{T_d}=X'$, respectively. We have $|P|=d_{\mathrm{H}}(Y, T_1)+d_{\mathrm{H}}(X, T_1)+2\sum_{i=1}^{d-1}d_{\mathrm{H}}(\overline{T_i}, T_{i+1})+d_{\mathrm{H}}(\overline{T_d}, X')+d_{\mathrm{H}}(\overline{T_d}, Y')+2d+\Delta$, where $\Delta=1$ if $T_1\neq X$ and $\overline{T_d}\neq X'$, $\Delta=0$ if $T_1=X$ or $\overline{T_d}=X'$ but not both, and $\Delta=-1$ if $T_1=X$ and $\overline{T_d}=X'$.

If d is odd, then

$$
\begin{aligned}
& d_{\mathrm{H}}(Y, T_1)+d_{\mathrm{H}}(X, T_1)+2\sum_{i=1}^{d-1}d_{\mathrm{H}}(\overline{T_i}, T_{i+1}) \\
= \; & (d_{\mathrm{H}}(Y, T_1)+\sum_{i\in\{1,3,5,\ldots,d-2\}} d_H(T_i, \overline{T_{i+1}})+\sum_{i\in\{2,4,6,\ldots,d-1\}} d_H(\overline{T_i}, T_{i+1}))+(d_{\mathrm{H}}(X, T_1)+ \\
& \sum_{i\in\{1,3,5,\ldots,d-2\}} d_H(T_i, \overline{T_{i+1}})+\sum_{i\in\{2,4,6,\ldots,d-1\}} d_H(\overline{T_i}, T_{i+1})) \\
\geq \; & d_{\mathrm{H}}(Y, T_d)+d_{\mathrm{H}}(X, T_d).
\end{aligned}
$$

Hence $|P|\geq d_{\mathrm{H}}(Y, T_d)+d_{\mathrm{H}}(X, T_d)+d_{\mathrm{H}}(\overline{T_d}, X')+d_{\mathrm{H}}(\overline{T_d}, Y')+2d+\Delta\geq d_{\mathrm{H}}(Y, M)+d_{\mathrm{H}}(X, M)+d_{\mathrm{H}}(\overline{M}, X')+d_{\mathrm{H}}(\overline{M}, Y')+2d+\Delta$, where $M\in Q_{\min}$ and $\Delta\in\{1, 0, -1\}$. If P contains neither of $(X, X)\rightarrow(\overline{X}, \overline{X})$ and $(X', X')\rightarrow(\overline{X'}, \overline{X'})$, then $\{T_1, T_d\}\cap\{X, \overline{X}, X', \overline{X'}\}$ is empty, which implies $\Delta=1$. If P contains $(X, X)\rightarrow(\overline{X}, \overline{X})$ or $(X', X')\rightarrow(\overline{X'}, \overline{X'})$ but not both, then $\{T_1, T_d\}\cap\{X, \overline{X}\}$ or $\{T_1, T_d\}\cap\{X', \overline{X'}\}$ is empty, which implies $\Delta\in\{0, 1\}$. Otherwise, we have $\Delta\in\{-1, 0, 1\}$.

If d is even, then $d_{\mathrm{H}}(Y, T_1)+d_{\mathrm{H}}(X, T_1)+2\sum_{i=1}^{d-1} d_{\mathrm{H}}(\overline{T_i}, T_{i+1})\geq d_{\mathrm{H}}(Y, \overline{T_d})+d_{\mathrm{H}}(X, \overline{T_d})$, similarly. Hence $|P|\geq d_{\mathrm{H}}(Y, \overline{T_d})+d_{\mathrm{H}}(X, \overline{T_d})+d_{\mathrm{H}}(\overline{T_d}, X')+d_{\mathrm{H}}(\overline{T_d}, Y')+2d+\Delta\geq d_{\mathrm{H}}(Y, Y')+d_{\mathrm{H}}(X, X')+2d-1$. □

In Lemma 9, when d is odd, the computation of Δ is with the purpose of getting a more accurate lower bound on $|P|$. It is crucial to the main result in Section 5.

Lemma 10. The n-fault diameter of the HCN(n) is $n+\lfloor n/3\rfloor+3$ at least.

Proof. To prove this lemma, we show two nodes $I=(X, Y)$ and $I'=(X', Y')$ whose distance can increase to $n+\lfloor n/3\rfloor+3$ or more if at most n nodes are removed, where $X\neq X'$. According to Lemma 8 and Lemma 9, there are lower bounds on the lengths of four categories of paths from I to I'. We use l_1, l_2, l_3, and l_4 to denote the lower bounds. I and I' are intended to minimize $|\{l_i \mid l_i<n+\lfloor n/3\rfloor+3 \text{ and } 1\leq i\leq 4\}|$ and maximize l_i for each $l_i<n+\lfloor n/3\rfloor+3$.

For each $l_i<n+\lfloor n/3\rfloor+3$, the nodes to be removed are intended to increase l_i to $n+\lfloor n/3\rfloor+3$ or more. When $|\{l_i \mid l_i<n+\lfloor n/3\rfloor+3 \text{ and } 1\leq i\leq 4\}|<4$, removing fewer than n nodes can result in a lower bound of $n+\lfloor n/3\rfloor+3$ on the lengths of paths from I to I'. Three cases: (1) $n=3k+1$, (2) $n=3k+2$, and (3) $n=3k$ are discussed below, where $k\geq 1$.

Case 1. $n=3k+1$. Consider $I=(X, Y)$ and $I'=(X', Y')$ with $f_2=k+1$ and $f_3=f_4=k$ (hence $X\neq\overline{X'}$ and $f_1=f_5=f_6=f_7=f_8=0$), and remove $2k+2$ nodes (X, X'), (Y, X), and $(X, Y^{(i)})$ for all $i\in F_3\cup F_4$ from the HCN(n). Let P be a path from $(X, Y^{(j)})$ to I' in the resulting HCN(n), where $j\in F_2$. Since every path from I to I' has $(X, Y^{(j)})$ as the second node, it suffices to show $|P|\geq n+\lfloor n/3\rfloor+2=4k+3$. Two cases are discussed below.

Case 1.1. P contains no diameter link. Since node (X, X') was removed, P contains two or more nondiameter links. According to Lemma 8, $|P|\geq\min\{d_{\mathrm{H}}(Y^{(j)}, Y')+d_{\mathrm{H}}(X, X')+2, d_{\mathrm{H}}(Y^{(j)}, X')+d_{\mathrm{H}}(X, Y')+3\}=\min\{(d_{\mathrm{H}}(Y, Y')-1)+d_{\mathrm{H}}(X, X')+2, (d_{\mathrm{H}}(Y, X')+1)+d_{\mathrm{H}}(X, Y')+3\}$ (because $j\in F_2$), which is equal to $\min\{2f_2+2f_4+f_5+f_6+f_7+f_8+1, 2f_3+2f_4+f_5+f_6+f_7+f_8+4\}=\min\{4k+3, 4k+4\}=4k+3$ by Lemma 1.

Case 1.2. P contains $d>0$ diameter links. According to Lemma 9, if d is even, then $|P|\geq d_{\mathrm{H}}(Y^{(j)}, Y')+d_{\mathrm{H}}(X, X')+3=4k+4$. If d is odd, then $|P|\geq d_{\mathrm{H}}(Y^{(j)}, N)+d_{\mathrm{H}}(X, N)+d_{\mathrm{H}}(\overline{N}, X')+d_{\mathrm{H}}(\overline{N}, Y')+2d+\Delta$, where N belongs to $Q_{\min}$ with Y replaced by $Y^{(j)}$. Since $X\neq X'$ and $X\neq\overline{X'}$, links $(X, X)\rightarrow(\overline{X}, \overline{X})$ and $(X', X')\rightarrow(\overline{X'}, \overline{X'})$ are distinct. Hence, when $d=1$, we have $\Delta\in\{0, 1\}$ and hence $2d+\Delta\geq 2$. When $d\geq 3$, we have $2d+\Delta\geq 6+(-1)=5$. Since $d_{\mathrm{H}}(Y^{(j)}, N)\geq d_{\mathrm{H}}(Y, N)-1$ and $d_{\mathrm{H}}(Y, N)+d_{\mathrm{H}}(X, N)+d_{\mathrm{H}}(\overline{N}, X')+d_{\mathrm{H}}(\overline{N}, Y')\geq 2f_1+2f_2+2f_3+f_5+f_6+f_7+f_8$ (by Lemma 1), we have $|P|\geq 2f_1+2f_2+2f_3+f_5+f_6+f_7+f_8+(2-1)=4k+3$.

Case 2. $n=3k+2$. Consider $I=(X, Y)$ and $I'=(X', Y')$ with $f_2=f_3=k$ and $f_4=k+2$, and remove $2k+3$ nodes (X, X), (X', X'), (Y, X), and $(X, Y^{(i)})$ for all $i\in F_2\cup F_3$ from the HCN(n). Let P be a path from $(X, Y^{(j)})$ to I' in the resulting HCN(n), where $j\in F_4$. It suffices to show $|P|\geq n+\lfloor n/3\rfloor+2=4k+4$.

Similar to Case 1, we have $|P|\geq\min\{d_{\mathrm{H}}(Y^{(j)}, Y')+d_{\mathrm{H}}(X, X')+2, d_{\mathrm{H}}(Y^{(j)}, X')+d_{\mathrm{H}}(X, Y')+1\}=\min\{4k+5, 4k+4\}=4k+4$ if P contains no diameter link, and $|P|\geq\min\{d_{\mathrm{H}}(Y^{(j)}, Y')+d_{\mathrm{H}}(X, X')+3, d_{\mathrm{H}}(Y^{(j)}, N)+d_{\mathrm{H}}(X, N)+d_{\mathrm{H}}(\overline{N}, X')+d_{\mathrm{H}}(\overline{N}, Y')+2+\Delta\}$ if P contains one or more diameter links, where N has the same meaning as in Case 1.2. We have $d_{\mathrm{H}}(Y^{(j)}, Y')+d_{\mathrm{H}}(X, X')+3=4k+6$. Since nodes (X, X) and (X', X') were removed, we have $\Delta=1$. In the following, we show $d_{\mathrm{H}}(Y^{(j)}, N)=d_{\mathrm{H}}(Y, N)+1$. Hence, $d_{\mathrm{H}}(Y^{(j)}, N)+d_{\mathrm{H}}(X, N)+d_{\mathrm{H}}(\overline{N}, X')+d_{\mathrm{H}}(\overline{N}, Y')+2+\Delta=d_{\mathrm{H}}(Y, N)+d_{\mathrm{H}}(X, N)+d_{\mathrm{H}}(\overline{N}, X')+d_{\mathrm{H}}(\overline{N}, Y')+(3+1)\geq 2f_1+2f_2+2f_3+f_5+f_6+f_7+f_8+4=4k+4$.

Suppose $X=x_1x_2\ldots x_n$, $Y=y_1y_2\ldots y_n$, $X'=x'_1x'_2\ldots x'_n$, $Y'=y'_1y'_2\ldots y'_n$, and $N=n_1n_2\ldots n_n$. We have

$$\begin{aligned}
&d_{\mathrm{H}}(Y^{(j)}, N)+d_{\mathrm{H}}(X, N)+d_{\mathrm{H}}(\overline{N}, X')+d_{\mathrm{H}}(\overline{N}, Y')\\
=&\sum_{i\in\{1,2,\ldots,n\}-\{j\}}\{(y_i\oplus n_i)+(x_i\oplus n_i)+(\overline{n_i}\oplus x'_i)+(\overline{n_i}\oplus y'_i)\}+\\
&((\overline{y_j}\oplus n_j)+(x_j\oplus n_j)+(\overline{n_j}\oplus x'_j)+(\overline{n_j}\oplus y'_j)),
\end{aligned}$$

where $(y_i\oplus n_i)+(x_i\oplus n_i)+(\overline{n_i}\oplus x'_i)+(\overline{n_i}\oplus y'_i)$ and $(\overline{y_j}\oplus n_j)+(x_j\oplus n_j)+(\overline{n_j}\oplus x'_j)+(\overline{n_j}\oplus y'_j)$ are required to be minimum. Since $j\in F_4$, we have $x_j=y_j=\overline{x'_j}=\overline{y'_j}$, which implies $(\overline{y_j}\oplus n_j)+(x_j\oplus n_j)+(\overline{n_j}\oplus x'_j)+(\overline{n_j}\oplus y'_j)=1$ if $n_j=y_j$, and 3 if $n_j=\overline{y_j}$. Consequently, we have $n_j=y_j$ and hence $d_{\mathrm{H}}(Y^{(j)}, N)=d_{\mathrm{H}}(Y, N)+1$.

Case 3. $n=3k$. Three cases are discussed below.

Case 3.1. $k=1$. Consider $I=(X, Y)=(000, 110)$ and $I'=(X', Y')=(111, 001)$, and remove three nodes $(X, X)=(\overline{X'}, \overline{X'})$, $(X, X')=(X, Y^{(3)})$, and (Y, X) from the HCN(n). We have $F_2=\{1, 2\}$ and $F_4=\{3\}$. Let P be a

path from $(X, Y^{(j)})$ to I' in the resulting HCN(n), where $j \in F_2$. It suffices to show $|P| \geq n+\lfloor n/3 \rfloor+2=6$.

Similar to Case 1.1, $|P| \geq 6$ if P contains no diameter link, and similar to Case 2, $|P| \geq \min\{d_H(Y^{(j)}, Y')+d_H(X, X')+3, d_H(Y^{(j)}, N)+d_H(X, N)+d_H(\overline{N}, X')+d_H(\overline{N}, Y')+3\ (\Delta=1)\}$ if P contains one or more diameter links. We have $d_H(Y^{(j)}, Y')+d_H(X, X')+3=8$ and $d_H(Y^{(j)}, N)+d_H(X, N)+d_H(\overline{N}, X')+d_H(\overline{N}, Y')+3 \geq (d_H(Y, N)-1)+d_H(X, N)+d_H(\overline{N}, X')+d_H(\overline{N}, Y')+3 \geq 6$.

Case 3.2. k=2. Consider $I=(X, Y)=(000000, 110000)$ and $I'=(X', Y')=(101111, 011111)$, and remove four nodes (X, X), (Y, Y), $(\overline{X'}, \overline{X'})$, and $(\overline{Y'}, \overline{Y'})$ from the HCN(n). We have $F_2=\{1\}$, $F_3=\{2\}$, $F_4=\{3, 4, 5, 6\}$, and $Q_{\min}=\{000000, 110000, 010000, 100000\}=\{X, Y, \overline{X'}, \overline{Y'}\}$. Let P be a path from I to I' in the resulting HCN(n). It suffices to show $|P| \geq n+\lfloor n/3 \rfloor+3=11$. Three cases are discussed below.

Case 3.2.1. P contains no diameter link. By Lemma 8, $|P| \geq \min\{d_H(Y, Y')+d_H(X, X')+2, d_H(Y, X')+d_H(X, Y')+1\}=11$.

Case 3.2.2. P contains one diameter link. We have $|P| \geq d_H(Y, T)+d_H(X, T)+d_H(\overline{T}, X')+d_H(\overline{T}, Y')+\delta$, where $(T, T) \rightarrow (\overline{T}, \overline{T})$ is the diameter link (refer to Section 2 for P_3). Since nodes (X, X), (Y, Y), $(\overline{X'}, \overline{X'})$, and $(\overline{Y'}, \overline{Y'})$ were removed, we have $T \notin \{X, Y, \overline{X'}, \overline{Y'}\}=Q_{\min}$, which implies δ=3. Suppose $T=t_1t_2\ldots t_6$ and $M=m_1m_2\ldots m_6 \in Q_{\min}$. We have $t_3t_4t_5t_6 \neq 0000=m_3m_4m_5m_6$. Without loss of generality, we assume $t_r=1$, where $3 \leq r \leq 6$. We have $(y_r \oplus t_r)+(x_r \oplus t_r)+(\overline{t_r} \oplus x'_r)+(\overline{t_r} \oplus y'_r)=4$ and $(y_r \oplus m_r)+(x_r \oplus m_r)+(\overline{m_r} \oplus x'_r)+(\overline{m_r} \oplus y'_r)=0$.

Recall that

$$\begin{aligned} & d_H(Y, T)+d_H(X, T)+d_H(\overline{T}, X')+d_H(\overline{T}, Y') \\ = & \sum_{i=1}^{6}\{(y_i \oplus t_i)+(x_i \oplus t_i)+(\overline{t_i} \oplus x'_i)+(\overline{t_i} \oplus y'_i)\}, \text{ and} \\ & d_H(Y, M)+d_H(X, M)+d_H(\overline{M}, X')+d_H(\overline{M}, Y') \\ = & \sum_{i=1}^{6}\{(y_i \oplus m_i)+(x_i \oplus m_i)+(\overline{m_i} \oplus x'_i)+(\overline{m_i} \oplus y'_i)\}. \end{aligned}$$

Since $M \in Q_{\min}$, we have $(y_i \oplus t_i)+(x_i \oplus t_i)+(\overline{t_i} \oplus x'_i)+(\overline{t_i} \oplus y'_i) \geq (y_i \oplus m_i)+(x_i \oplus m_i)+(\overline{m_i} \oplus x'_i)+(\overline{m_i} \oplus y'_i)$ for all $1 \leq i \leq 6$. By Lemma 1, $d_H(Y, M)+d_H(X, M)+d_H(\overline{M}, X')+d_H(\overline{M}, Y')=2f_1+2f_2+2f_3+f_5+f_6+f_7+f_8=4$. Hence $|P| \geq 4+4+3=11$.

Case 3.2.3. P contains two or more diameter links. By Lemma 9, $|P| \geq \min\{d_H(Y, Y')+d_H(X, X')+3,$

$d_H(Y, M)+d_H(X, M)+d_H(\overline{M}, X')+d_H(\overline{M}, Y')+6+\Delta\}$, where $M \in Q_{\min}$ and $\Delta=1$ (because nodes (X, X) and $(\overline{X'}, \overline{X'})$ were removed). Further, by Lemma 1, $|P|\geq\min\{2f_2+2f_4+f_5+f_6+f_7+f_8+3, 2f_1+2f_2+2f_3+f_5+f_6+f_7+f_8+7\}=11$.

Case 3.3. $k\geq3$. Consider $I=(X, Y)$ and $I'=(X', Y')$ with $f_2=k+1$, $f_3=k-1$, and $f_4=k$, and remove $2k+3$ nodes (X, X), (X, X'), (X', X'), (Y, X), and $(X, Y^{(i)})$ for all $i \in F_3\cup F_4$ from the HCN(n). Let P be a path from $(X, Y^{(j)})$ to I' in the resulting HCN(n), where $j \in F_2$. It suffices to show $|P|\geq n+\lfloor n/3\rfloor+2=4k+2$.

Similar to Case 1.1, $|P|\geq4k+2$ if P contains no diameter link, and similar to Case 2, $|P|\geq\min\{d_H(Y^{(j)}, Y')+d_H(X, X')+3, d_H(Y^{(j)}, N)+d_H(X, N)+d_H(\overline{N}, X')+d_H(\overline{N}, Y')+3\ (\Delta=1)\}$ if P contains one or more diameter links. We have $d_H(Y^{(j)}, Y')+d_H(X, X')+3=4k+4$ and $d_H(Y^{(j)}, N)+d_H(X, N)+d_H(\overline{N}, X')+d_H(\overline{N}, Y')+3\geq(d_H(Y, N)-1)+d_H(X, N)+d_H(\overline{N}, X')+d_H(\overline{N}, Y')+3\geq4k+2$. □

Combining Lemma 7 and Lemma 10, we have the following theorem, which is the main result of this paper.

Theorem 1. The worst-case length of a best container of width $n+1$, the $(n+1)$-wide diameter, and the n-fault diameter of the HCN(n) are $n+\lfloor n/3\rfloor+3$ or $n+\lfloor n/3\rfloor+4$.

6 Concluding remarks

In this paper, containers of width $n+1$ whose lengths are $n+\lfloor n/3\rfloor+4$ at most were constructed in the HCN(n). This improves on containers of [3] whose lengths are $2n+6$ at most. In addition, the $(n+1)$-wide diameter and n-fault diameter of the HCN(n) were shown to be $n+\lfloor n/3\rfloor+3$ or $n+\lfloor n/3\rfloor+4$. Since the $2n$-wide diameter and $(2n-1)$-fault diameter of the $2n$-cube are $2n+1$, the HCN has a smaller wide diameter and fault diameter than a comparable hypercube.

It is practically important to construct containers because they can be used to accelerate the transmission rate and to enhance the transmission reliability. Usually, the construction of best containers is closely related to the construction of shortest paths. As described in Section 2, the computation of shortest paths in the HCN involved three shortest paths P_1^*, P_2^*, and P_3^* obeying some constraints. Consequently, it is rather difficult to obtain best containers of the HCN by using a single construction method. The main construction method cannot produce containers of relatively small lengths everywhere, which is the reason why six auxiliary construction methods are needed.

On the other hand, a network with a low wide diameter and fault diameter gains the advantages of efficient parallel transmission and high fault-tolerant capability. A network with connectivity k is called *strongly resilient* if its (k–1)-fault diameter exceeds the diameter by a constant [12]. A strongly resilient network is superior in fault tolerance because of the slow increment of transmission delay caused by node faults. According to Theorem 1, the HCN is strongly resilient.

The HCN uses almost half as many links as a comparable hypercube and yet has a smaller diameter, wide diameter, and fault diameter. The use of diameter links is the main cause. But, at the same time, they make the topology of the HCN more complex. It becomes difficult to explore topological properties, e.g., shortest path, diameter, container, wide diameter, and fault diameter, of the HCN. We are going to explore other topological properties such as hamiltonicity and embedding of the HCN.

References

[1] F. Buckley and F. Harary, *Distance in Graphs*, Addison-Wesley, 1990.

[2] C. C. Chen and J. Chen, "Optimal parallel routing in star networks," *IEEE Transactions on Computers*, vol. 46, no. 12, pp. 1293-1303, 1997.

[3] W. K. Chiang and R. J. Chen, "Topological properties of hierarchical cubic networks," *Journal of Systems Architecture*, vol. 42, pp. 289–307, 1996.

[4] K. Day and A. E. Al-Ayyoub, "Fault diameter of k-ary n-cube networks," *IEEE Transactions on Parallel and Distributed Systems*, vol. 8, no. 9, pp. 903-907, 1997.

[5] K. Day and A. Tripathi, "Characterization of node disjoint paths in arrangement graphs," Technical Report TR 91-43, Computer Science Department, University of Minnesota, Minneapolis, MN, 1991.

[6] M. Dietzfelbinger, S. Madhavapeddy, and I. H. Sudborough, "Three disjoint path paradigms in star networks," *Proceedings of the 3rd IEEE Symposium on Parallel and Distributed Processing*, 1991, pp. 400-406.

[7] D. R. Duh and G. H. Chen, "Topological properties of WK-recursive networks," *Journal of Parallel and Distributed Computing*, vol. 23, no. 3, pp. 468-474, 1994.

[8] D. R. Duh, G. H. Chen, and D. F. Hsu, "Combinatorial properties of generalized hypercube graphs," *Information Processing Letters*, vol. 57, pp. 41-45, 1996.

[9] K. Ghose and K. R. Desai, "Hierarchical cubic networks," *IEEE Transactions on Parallel and*

Distributed Systems, vol. 6, no. 4, pp. 427-435, 1995.

[10] D. F. Hsu, "On container width and length in graphs, groups, and networks," *IEICE Transactions on Fundamentals of Electronics, Communications and Computer Science*, vol. E77-A, pp. 668-680, 1994.

[11] H. L. Huang and G. H. Chen, "Combinatorial properties of two-level hypernet networks," *IEEE Transactions on Parallel and Distributed Systems*, vol. 10, no. 11, pp. 1192-1199, 1999.

[12] M. S. Krishnamoorthy and B. Krishnamurthy, "Fault diameter of interconnection networks," *Computers and Mathematics with Applications*, vol. 13, no. 5+6, pp. 577-582, 1987.

[13] S. Latifi, "Combinatorial analysis of the fault-diameter of the *n*-cube," *IEEE Transactions on Computers*, vol. 42, no. 1, pp. 27-33, 1993.

[14] S. C. Liaw, G. J. Chang, F. Cao, and D. F. Hsu, "Fault-tolerant routing in circulant networks and cycle prefix networks," *Annals of Combinatorics*, vol. 2, pp. 165-172, 1998.

[15] M. O. Rabin, "Efficient dispersal of information for security, load balancing, and fault tolerance," *Journal of the ACM*, vol. 36, no. 2, pp. 335-348, 1989.

[16] Y. Rouskov and P. K. Srimani, "Fault diameter of star graphs," *Information Processing Letters*, vol. 48, pp. 243-251, 1993.

[17] Y. Saad and M. H. Schultz, "Topological properties of hypercubes," *IEEE Transactions on Computers*, vol. 37, no. 7, pp. 867-872, 1988.

[18] S. K. Yun and K. H. Park, "The optimal routing algorithm in hierarchical cubic network and its properties," *IEICE Transactions on Information and Systems*, vol. E78-D, no. 4, pp. 436-443, 1995.

[19] S. K. Yun and K. H. Park, "Comments on hierarchical cubic Networks," *IEEE Transactions on Parallel and Distributed Systems*, vol. 9, no. 4, pp. 410-414, 1998.

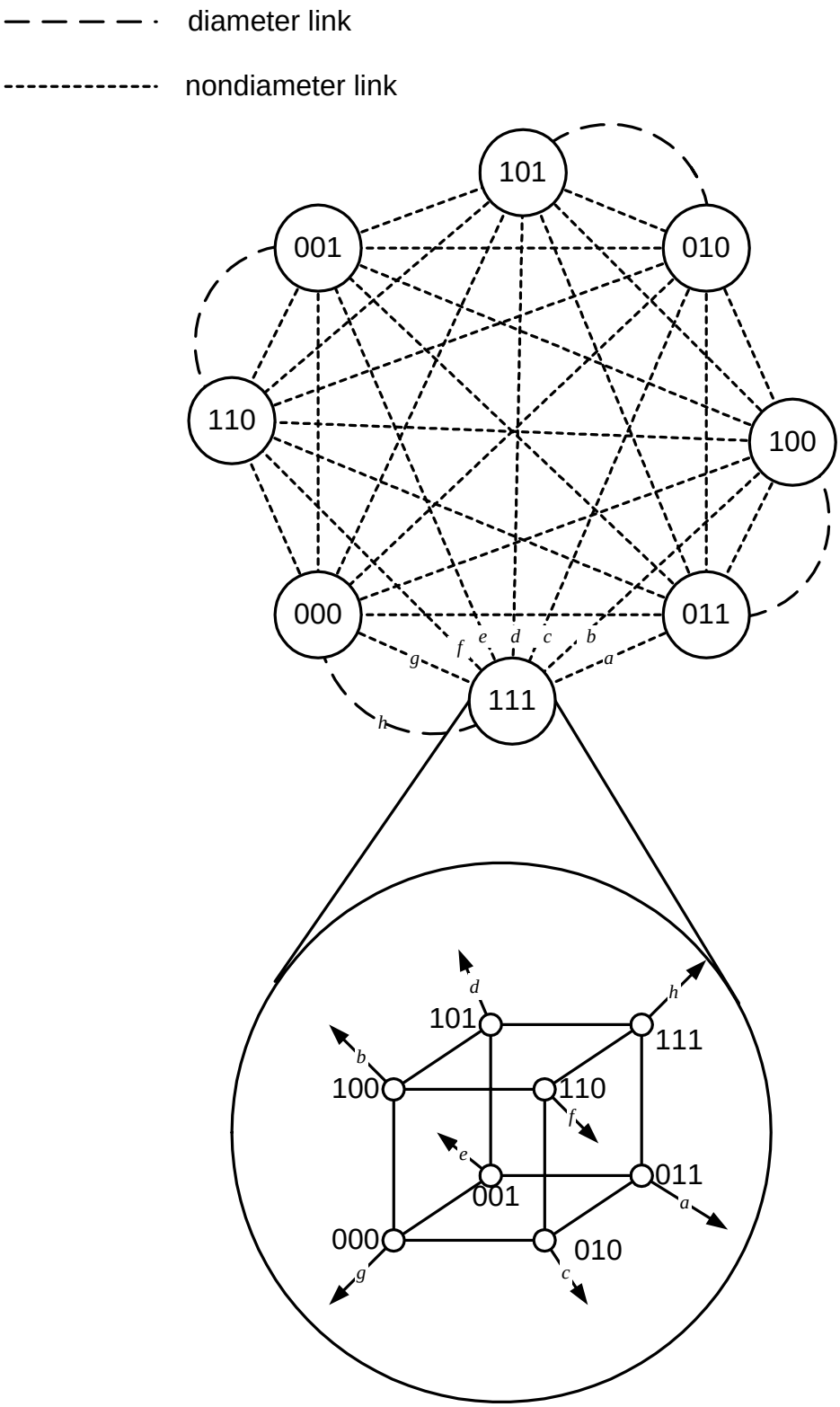

Figure 1. The HCN(3).

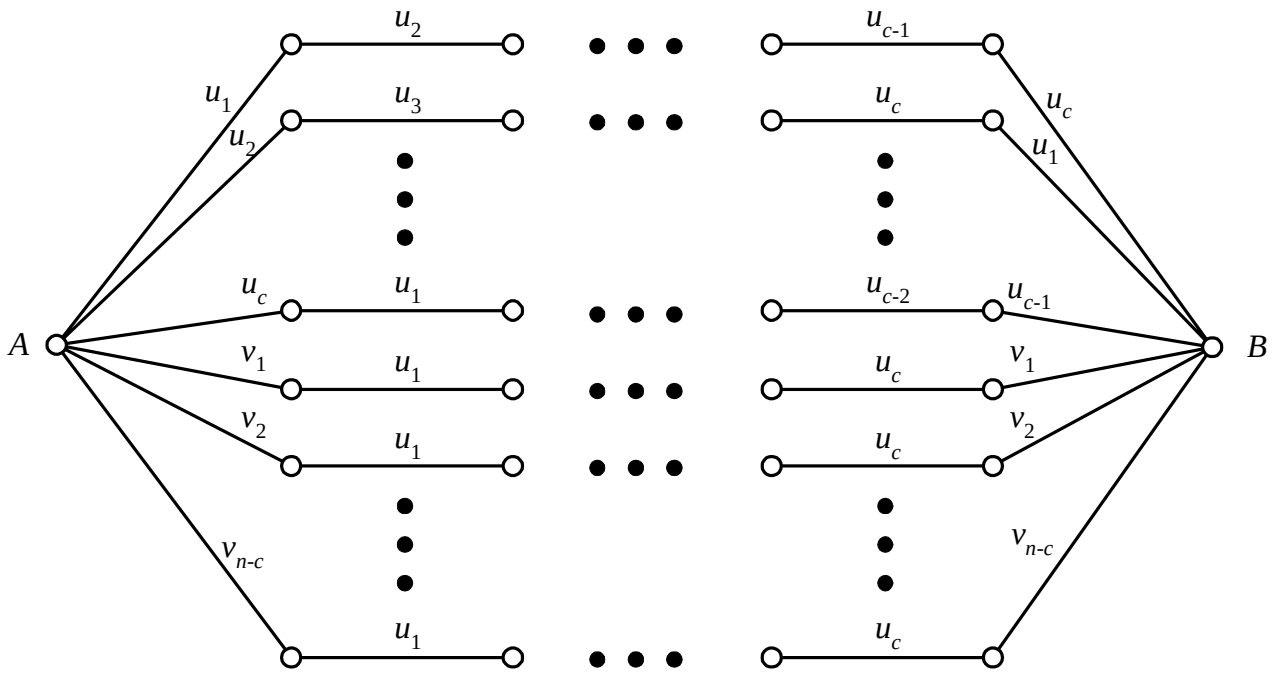

Figure 2. Saad and Schultz's best (A, B)-container.

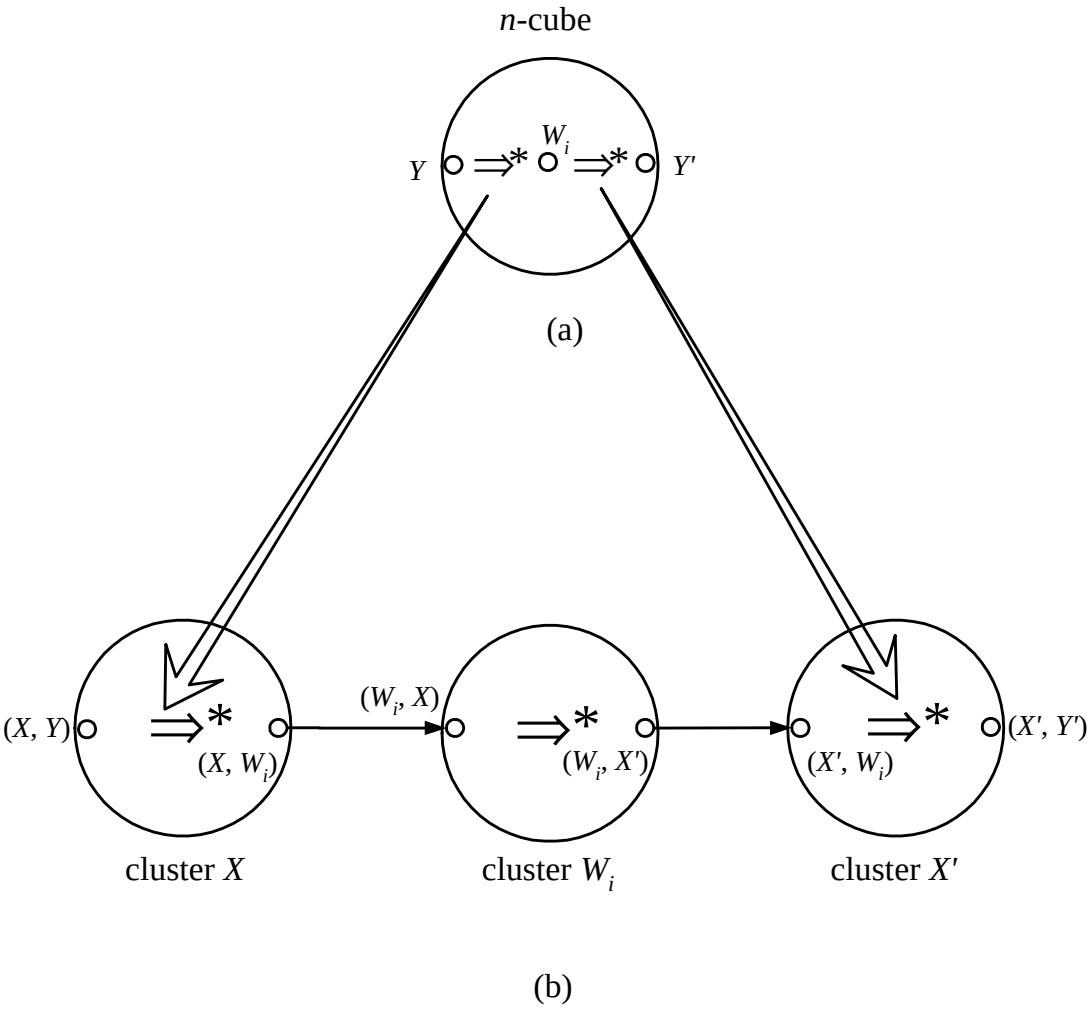

Figure 3. The construction of R_i from Q_i. (a) Q_i. (b) R_i.

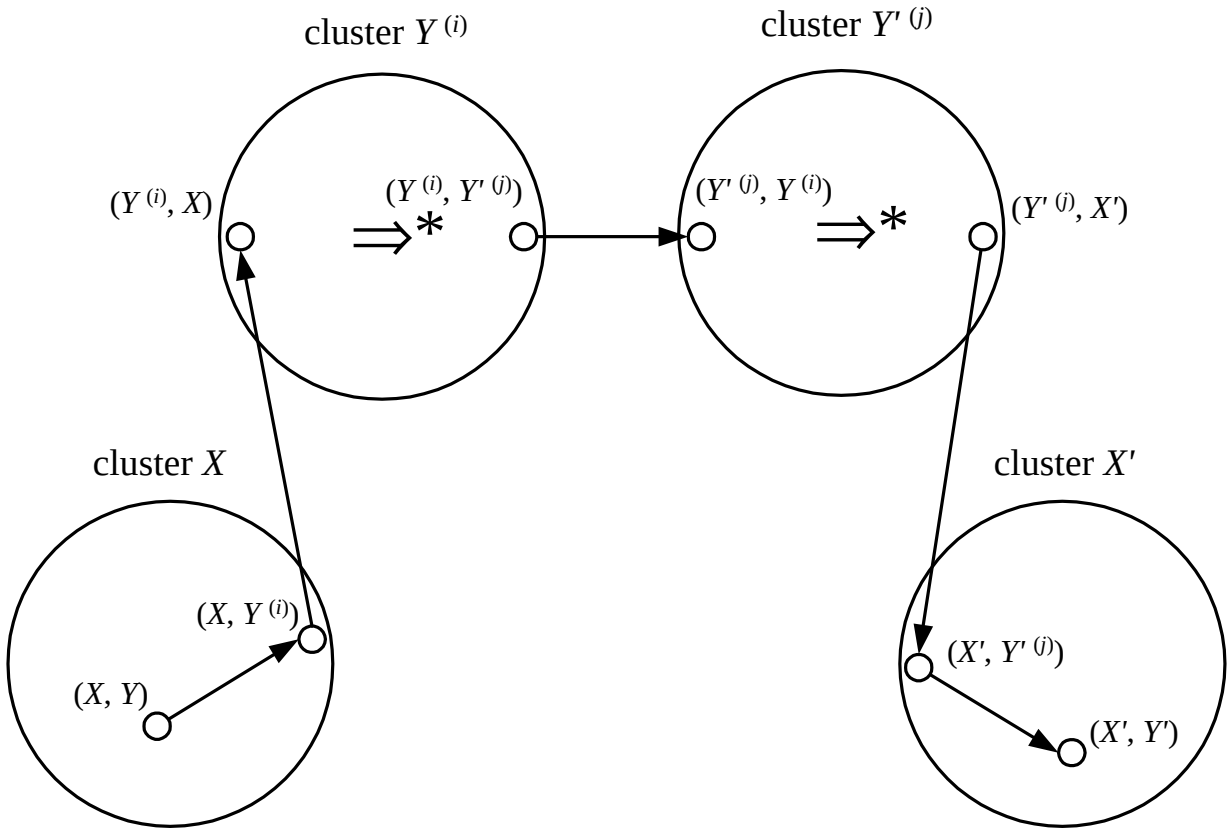
cluster $Y^{(i)}$
cluster $Y'^{(j)}$
$(Y^{(i)}, X)$
$(Y^{(i)}, Y'^{(j)})$
$\Rightarrow *$
$(Y'^{(j)}, Y^{(i)})$
$\Rightarrow *$
$(Y'^{(j)}, X')$
cluster X
cluster X'
$(X, Y^{(i)})$
(X, Y)
$(X', Y'^{(j)})$
(X', Y')

Figure 4. $P_{i,j}$.

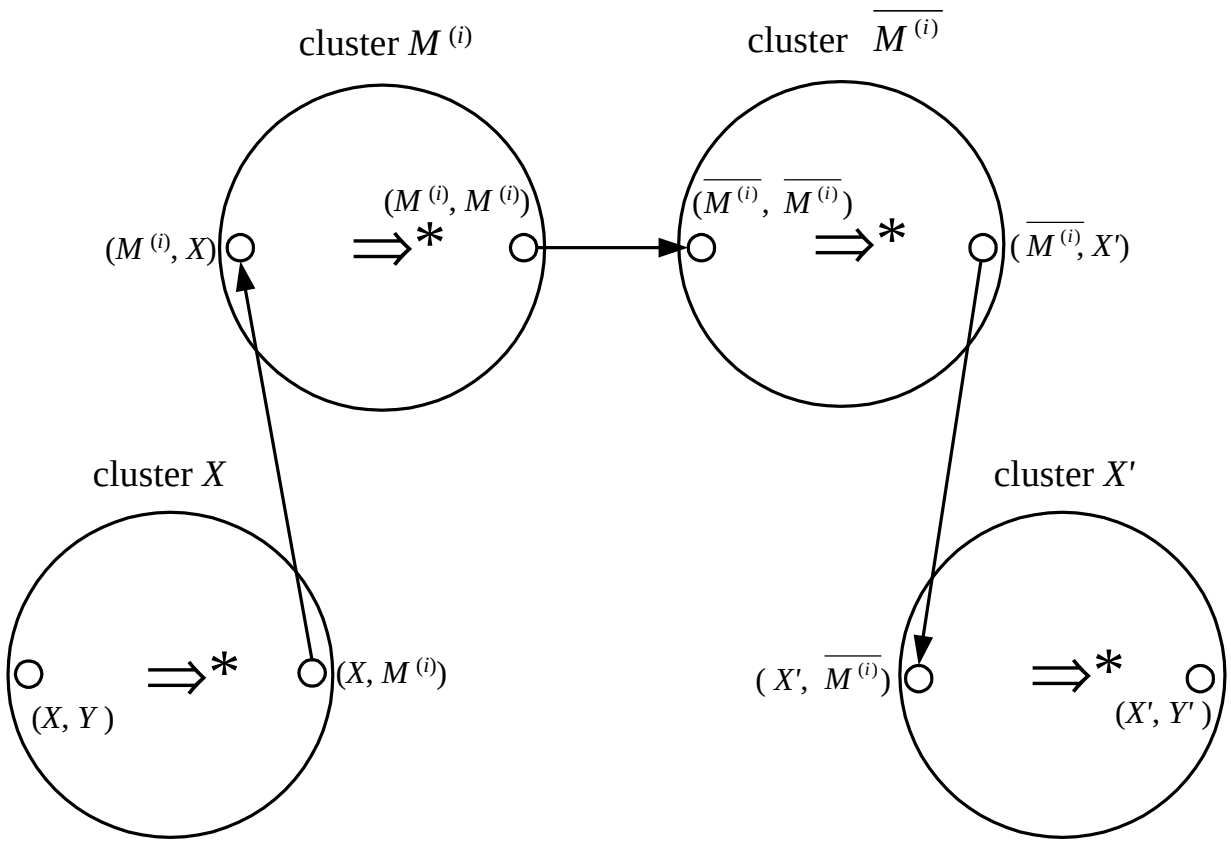

Figure 5. P_i^{B}.